GENERAL CATALOGUE **102**

HYDRAULICS

TORQUE Elite
HYDRAULICS

Contents

Pumps		Page:
Hand pumps		3
Pneumatic Pumps		4 - 5
Electric Pumps		6 – 8
Cylinders		
Introduction		9
Aluminium Cylinder		
Singel acting, Spring return,	50 – 100 tons	10
Hollow Cylinder, Single acting	30 – 60 tons	11
Hollow Cylinder, Double acting	30 – 60 tons	12
Load return, Lock Nut	50 – 100 tons	13
Steel Cylinders		
Hollow Ram, Singel acting	12 – 100 tons	14 – 15
Compact, Spring return	10 – 100 tons	14 – 15
Low model, Spring return	5 – 150 tons	14 – 15
Singel acting, Spring Return	5 – 100 tons	16 – 17
Lock Nut Cylinders	50 – 1000 tons	18 – 19
Lock Nut Cylinders, Low	60 – 500 tons	20
Double Acting Cylinders	10 – 100 tons	21
Hydraulic Pullers		
With integrated hand pump	4 – 30 tons	22
Without pump	4 – 30 tons	23
Push- and Pull	6 – 12 tons	24 – 25
Tri-Sections Plate		26 – 27
Puller	50 tons	28 – 29
Puller	100 and 150 tons	30 – 32
Universal Push/Puller, Rail road axle bearing		33 – 34
Tools		
Nut Splitter		35
Mechanical Flange Spreader		36
Jack	10 – 20 tons	37
Spreaders	15 – 25 tons	38
Lifting Wedge	18 ton	39
Accessories		40 - 42
Portable Power Kit	10 ton	43

ALUMINUM HAND PUMPS

Max. Working Pressure 700 bar / 10,000 psi
Large 3/8” pressure port for maximum flow
Low Handle effort for easy operation
Single & Two speed models

Model No.:AHP703D

Model No.:AHP703

Model No.:UHP2800

Model No.:AHP702

FEATURES:

- Our hand pumps are always featured with their rugged construction and low handle efforts.
- Aluminum Alloy construction and hand-size release knob with anti-lossing mechanism are truly Suitable to industrial requirements and your daily works.
- Special design with aluminum alloy construction as much light weight is ideally for easy portability and maneuvering.
- Double action design on AHP7030D is ideal for using with double acting cylinders, no extra controlling valve and adapters needed.
- 40,000 psi model brings you the special ultra high pressure application but with light weight.

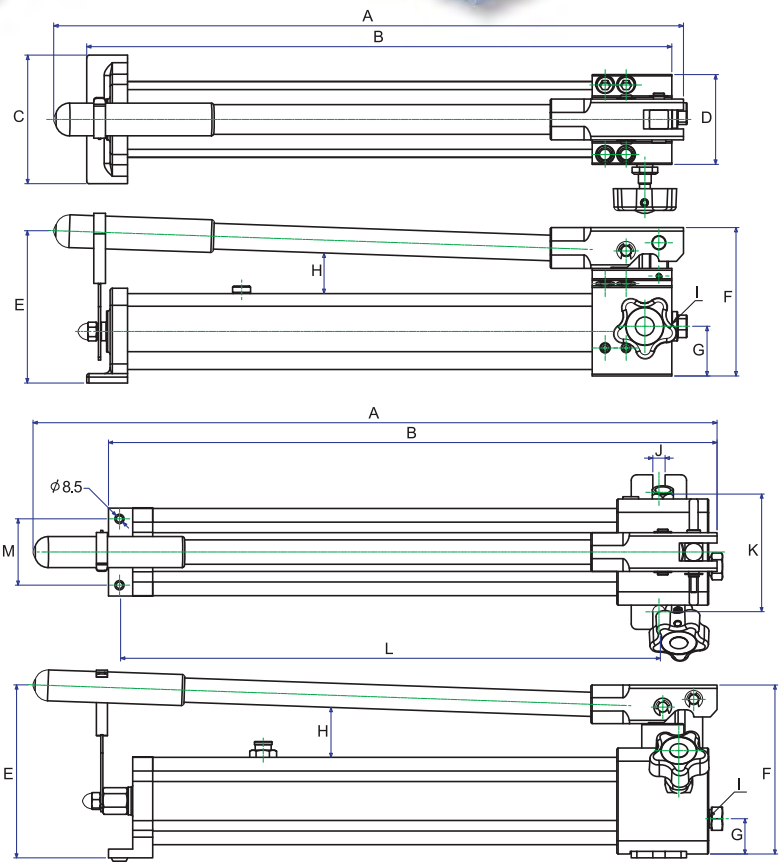

SPECIFICATIONS

Model No.	Pressure Rating (bar)		Usable Oil Capacity (c.c.)	Oil Volume Per Stroke (c.c.)		A (mm)	B (mm)	C (mm)	D (mm)	E (mm)	F (mm)	G (mm)	H (mm)	I	J (mm)	K (mm)	L (mm)	M (mm)	Weight (kgs)
	1st stage	2nd stage		1st stage	2nd stage														
AHP701	13.8	700	350	12.9	1	391	361	110	77	140	127	42.5	37	3/8"-NPT	--	--	--	--	2.3
AHP702	13.8	700	1000	12.9	2.3	542	513	110	77	130	127	42.5			--	--	--	--	3.5
AHP703	13.8	700	2000	12.9	2.3	623	556	150	102	135	135	50			--	--	--	--	6
AHP704	13.8	1000	1000	12.9	1.65	539	501	110	77	145	127	42.5			--	--	--	--	3.5
AHP705	13.8	1500	2000	6.5	1	699	629	150	102	152	157	50		3/4"-16UNF	--	--	--	--	6.7
AHP703D	13.8	700	2000	12.9	2.3	623	556	150	102	135	135	24/37		3/8"-NPT	--	--	--	--	7.0
UHP2800	14	2800	1000	12.9	0.65	620	488	80	140	108	157	26		3/4"-16UNF	11.2	108	165.5	60	5.3

AIR PUMPS

MODEL : AP921

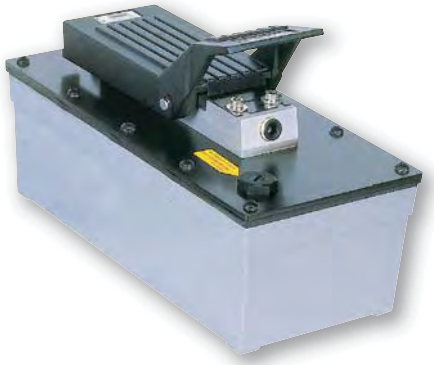

MODEL : AP1600 / AP3000

FEATURES:

- Air-power hydraulic pump is designed for using with single-acting cylinders and tools, like Jackram's ram series.
- Rugged construction and most components are made of Aluminum alloy and built for long service life, easy operation and portability.
- Automatic overload relief setting as 10,000 psi protects components in hydraulic system and work safety regardless of air pressure.
- New Inlet & Outlet design features low exhausting air volume, non-noise effect and being operated in all directions.
- Oil capacity can be modified according to your specific application.

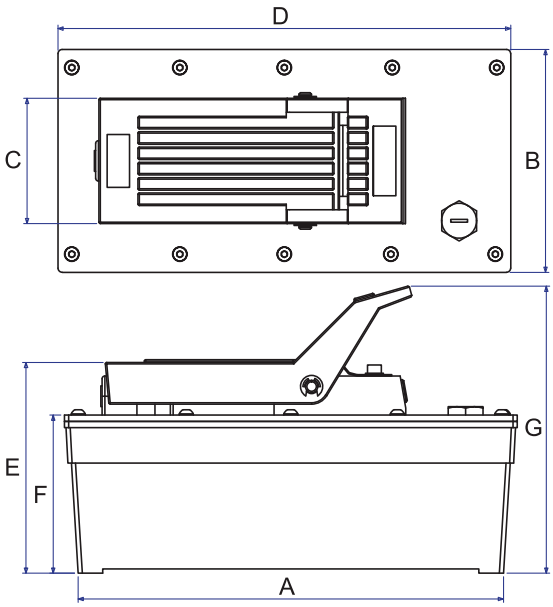

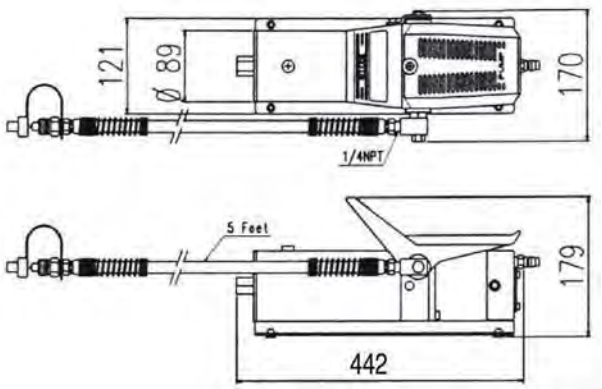

AIR PUMPS

MODEL : AP18

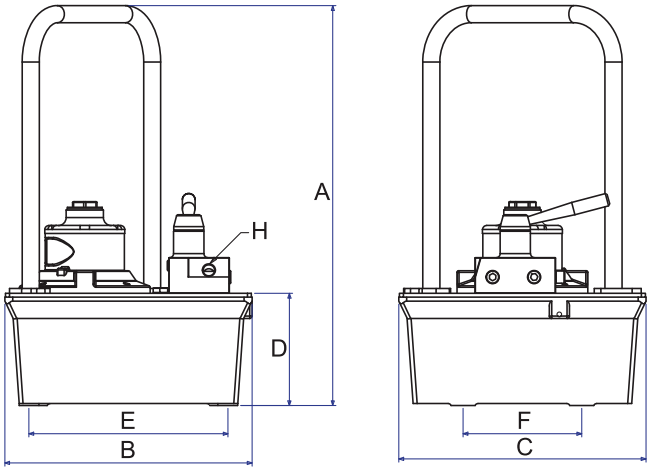

AP18

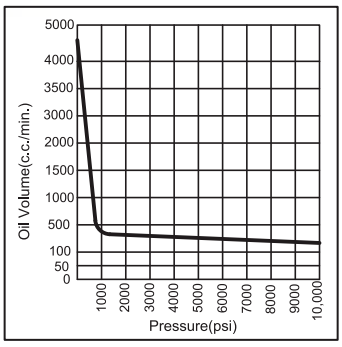

FEATURES:

- Two speed operation for fast speed cylinder advance.
- 8L Durable Aliminum Reservoir design.
- Air motor capable of starting under full load.

Pressure:
10 000 psi = 690 bar = 69 Mpa

Acting	Model No.	Max. Pressure Output (psi)	Valve		Oil Del. (c.c./min. @)*			
			Type	Function	0(psi)	100(psi)	5000(psi)	10000(psi)
Single	AP921	10,000	2 Position / 2 Way	Advance /Retract*	550	---	---	130
	AP1600S	10,000			1250	---	---	193
	AP3000S	10,000			1250	---	---	193
	AP18S	10,000			4700	3900	370	280
Double	AP1600D	10,000	3 Position / 4 Way	Adv./Hold/ Retract	1250	---	---	193
	AP3000D	10,000			1250	---	---	193
	AP18D	10,000			4700	3900	370	280

* Typical delivery.Actual Flow will vary with field conditions.
* Holds pressure in advance position when valve motor is shut off.
Pump will build pressure when motor is shut off, oil returns to reservoir.

Model No.	Air Consumption	Res. Capacity (c.c.)	A (mm)	B (mm)	C (mm)	D (mm)	E (mm)	F (mm)	G (mm)	H	Weight (kg)
AP921	9 CFM	750	442	170	89	---	---	---	179	---	5.4
AP1600 Series	9 CFM	1600	242	128	90	258	154	114	205	---	7.3
AP3000 Series	9 CFM	3000	305	160	90	325	152	114	205	---	10
AP18 Series	9 CFM	8000	505	312	312	142	251	149	---	3/8"-NPT	20*

* The weight is excluding the hydraulic oil.

TORQUE Elite ELECTRIC PUMPS

EP18D

EP211D

EP13

MODEL:EP13 & EP18

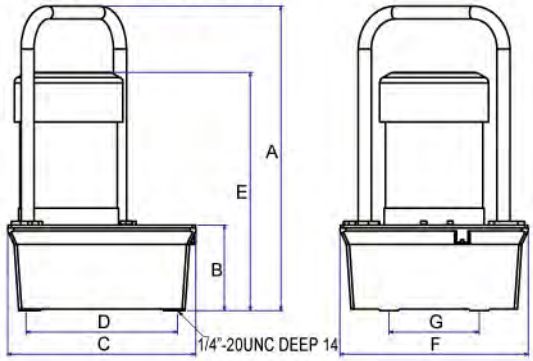

MODEL:EP211

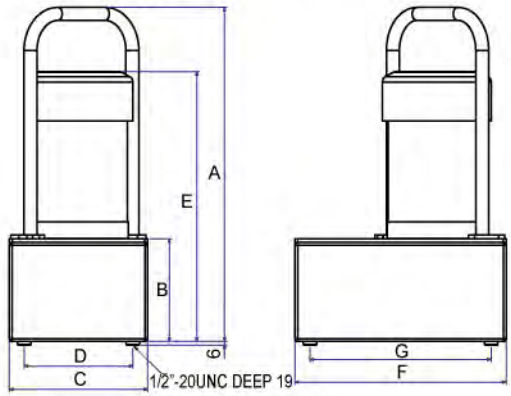

FEATURES:

Built for Long Life & Continuous Duty

Unique design provides high strength, fewer potential leak points and solid construct for severe duty.

High Performance/Fast Cycle Times

Provides high, first stage flows well into the work cycle. This extra power provides higher speeds in Prestressing, Bending, Criming, Compressing & Post-Tensioning applications.

Cool Running & Dependable Performance

High first stage performance is achieved through field proven Gear Pump technology. In adition to gear pumps, an unloading valve passes full power to the second stage once crossover pressure is reached. No power is lost and less heat is generated.

Quiet Operation

Low motor RPM, internally lubricated bearings and close coupled motor mounting make these pumps among the quietest on the market (About 80dBA at 700 bar.).

Starts full Load/Runs on Reduced Voltage

Our pump motors run well within their recommended duty factors drawing less amps, creating less heat and lasting longer than competitive pump motors.

EP13 & EP18

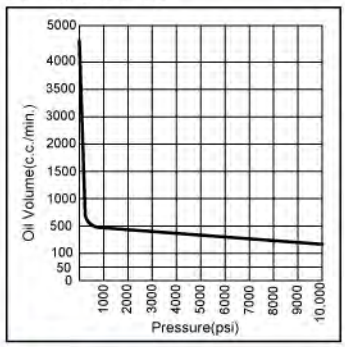

EP211

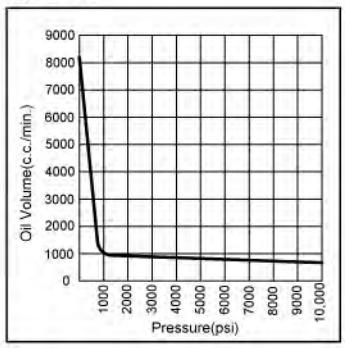

Glance Descriptions

- Two Speed operation
- Low weight & compact design
- 1/2 HP & 1½ HP 230V 50/60 Hz Universal motor
- 24V, 3M remote control cord.
- Thermal protected induction motor
- Meet CE requirements

1/2 HP & 1½ HP Electric Pumps - 700 bar

Acting	Model No.	Max. Pressure Output (psi)	Amp Draw 110V/220V at 10000 psi	Valve		Oil Del. (c.c./min. @)*			
				Type	Function	0(psi)	100(psi)	5000(psi)	10000(psi)
Single	EP13S	10000	9.6/4.8	2 Position / 2 Way	Adv./Hold /Retract	4200	3100	330	260
	EP18S	10000	9.6/4.8			4200	3100	330	260
	EP211S	10000	22.6/11.3			8200	7400	840	650
Double	EP13D	10000	9.6/4.8	3 Position / 4 Way		4200	3100	330	260
	EP18D	10000	9.6/4.8			4200	3100	330	260
	EP211D	10000	22.6/11.3			8200	7400	840	650

* Typical delivery.Actual Flow will vary with field conditions.

Model No.	RPM	Reservoir Capacity (c.c.)	Motor	A (mm)	B (mm)	C (mm)	D (mm)	E (mm)	F (mm)	G (mm)	Weight W/O Oil (kg)
EP13 Series	50 Hz/2560	3000	0.37 kW, 220V, 50/60 Hz, Single Phase	511	149	296	251	405	27	149.4	27
EP18 Series	50 Hz/2560	8000	0.37 kW, 220V, 50/60 Hz, Single Phase	505	142	312	251	395	312	149.4	31
EP211 Series	60 Hz/2860	11000	1.12 kW, 220V, 50/60 Hz, Single Phase	555	170	229	180	480	350	300	37

EP320D

EP420S

MODEL:EP320/EP420

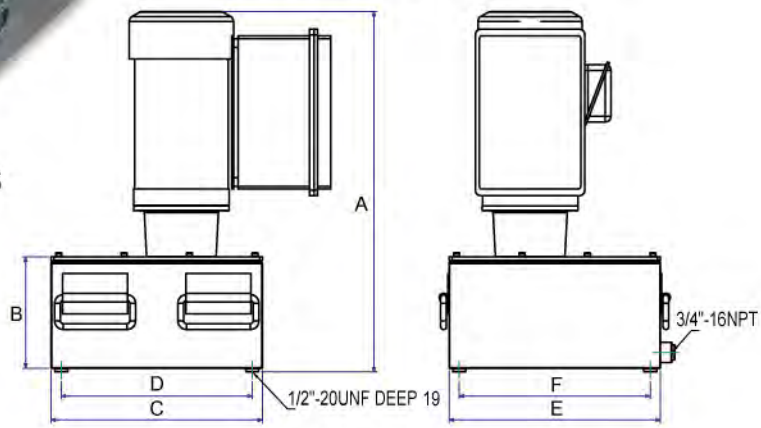

FEATURES:

- Start and operate under full load, even with voltage reduced 10%.
- Internal relief valve limits pressure to 700 bar accordingly.
- Pump prewired at factory with 1.49kW and 2.24kW, 380V, 50 Hz, 3 phase motor.
- 24 volt control circuits on units with remote controls for added user/operator safety.
- 3 phase motor with thermal overload protection.
- Pumps operate below maximum OSHA noise limition.

EP320

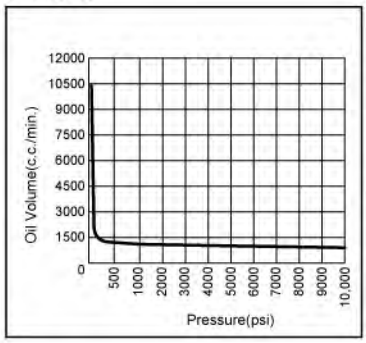

EP420

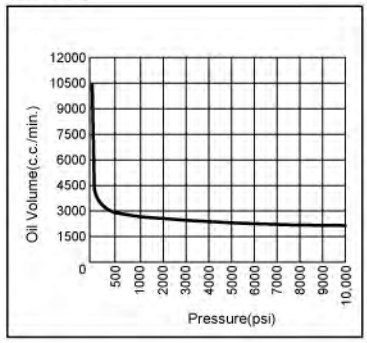

Pressure:
10 000 psi = 690 bar = 69 Mpa

2 HP & 3 HP Electric Pumps - 700 bar

Model No.	Reservoir Capacity (c.c.)	RPM	Motor	Max.Pressure Output (psi)	Amp Draw 220V/380V at 10000 psi	Oil Del.(c.c./min.@)*(60 Hz)			
						100(psi)	1000(psi)	5000(psi)	10000(psi)
EP320 Series	20,000	50Hz/1435 60 Hz/1735	1.49 KW 220/380V 50/60 Hz 3 Phase	10,000	7.1/4.1	9,500	1,100	1,060	980
EP420 Series			2.24 KW 220/380V 50/60 Hz 3 Phase	10,000	9.8/5.7	9,500	2,600	2,100	1,950

Model No.	RPM	Reservoir Capacity (c.c.)	Motor	A (mm)	B (mm)	C (mm)	D (mm)	E (mm)	F (mm)	Weight W/O Oil (kg)
EP320 Series	50Hz/1435 60 Hz/1735	20,000	1.49 KW 220/380V 50/60 Hz, 3 Phase	623	193	365	330	365	330	108
EP420 Series			2.24 KW 220/380V 50/60 Hz, 3 Phase	623	193	365	330	365	330	108

EP5100D

EP5100DS

MODEL:EP5100
USABLE OIL CAP. :80L
OIL CAPACITY: 100L

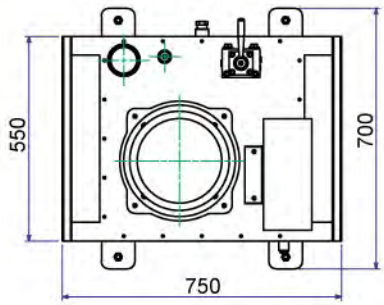

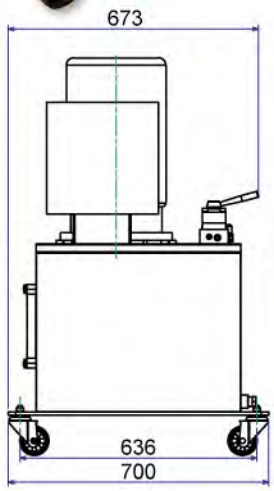

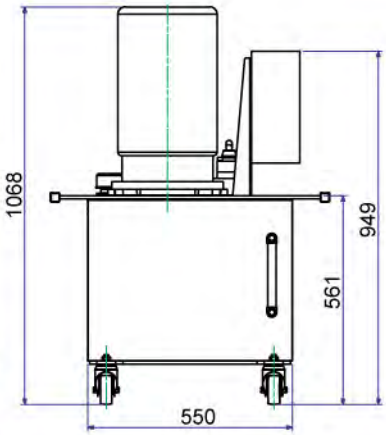

FEATURES:

- Two-speed high output pump delivers up to 16 l/min of oil.
- Low noise level of 73 - 80 dBA.
- Pump prewired at factory with 7.46kW, 380V, 50 Hz, 3 phase motor.
- 24 volt control circuits on units with remote controls for added user/operator safety.
- 3 phase motor with thermal overload protection and has all the electric components necessary to operate the pump
- Power switch are 24 volts. EP5100D has a 4-way/3-position manual valve. EP5100DS has a 4-way/3-position solenoid valve with a 24 volt remote switch.
- 100L (80L usable) reservoir has a low oil leve sight gauge.

EP5100

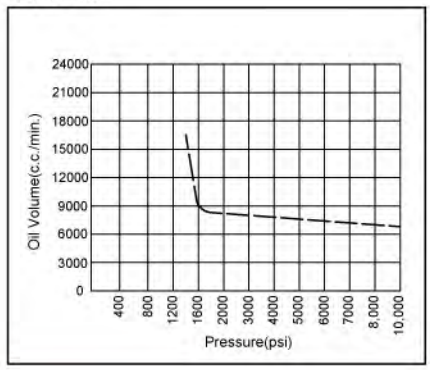

2 HP & 3 HP Electric Pumps - 700 bar

Model No.	Reservoir Capacity (l)	RPM	Motor	Max.Pressure Output (psi)	Amp Draw at 10000 psi	Oil Del.(l/min at..)			
						100(psi)	1000(psi)	5000(psi)	10000(psi)
EP5100D	100	1437	7.46kW 380V 50 Hz, 3 phase	10,000	6	16	14	6	5.6
EP5100DS									

Model No.	RPM	Reservoir Capacity (l)	Motor	A (mm)	B (mm)	C (mm)	D (mm)	E (mm)	F (mm)	Weight W/O Oil (kg)
EP5100D	1437	100	7.46kW 380V 50 Hz, 3 phase	1068	700	700	561	550	636	232
EP5100DS										241

Introduction - CYLINDERS

FEATURES:

1. Wide Variety
   Powerram offers the wide selection of cylinder style, capacity and stroke to match your daily needs.
2. Built for Rugged Industrial/ Construction Use
   All Powerram cylinders meet worldwide Safety Standards. Stop rings, plated pistons and heavy duty construction provide trouble free operation and long life.
3. Sure Spring Return
   Heavy duty, wound steel plated springs provide fast and complete retracting cycle after cycle, and retain their tension longer. Long lasting springs contribute substantially to cylinder life.
4. Versatile Fixturing
   Threaded collars and internal plunger threads withstand full loading for maximum flexibility in fixturing.
5. Piston Blow-Out Protection
   All Powerram cylinders incorporate a positive piston stop to limit piston travel at the end of the stroke, and allows the cylinder to be operated at full stroke. Piston stops add strength and safety to your Powerram cylinder.
6. Protection from Contamination
   Rod wiper clean the rod surface during retraction, protecting the inner cylinder assembly from dirt, moisture and other contaminants.
7. Protection from Outside
   Most cylinders have Black Nitriding Finish to protect the cylinder from dirt, moisture and other contaminants for long life.

Cylinders At a Glance Chart

Series	Description	Type	Capacity (Tons)	Stroke (mm)	Page
NSSS	General Purpose, Spring Return	Signle Acting	5 - 95	25.4 - 362	16 - 17
NSLS	Low Profile, Spring Return	Signle Acting	5 - 150	6 - 17	14 - 15
NSCS	Compact, Spring Return	Signle Acting	10 - 90	38 - 57	14 - 15
NSHS	Hollow, Spring Return	Signle Acting	13 - 95	8 - 158	14 - 15
JLLC	Lock Nut, Load Return	Signle Acting	50 - 1000	50 - 300	18- 19
JLPC	Pan Lock Nut, Load Return	Signle Acting	60 - 520	45 - 50	20
SSA	Aluminium, Spring Return	Signle Acting	50 - 100	51 - 254	10
ALNC	Aluminium, Lock Nut, Load Return	Signle Acting	50 - 100	51 - 254	13
ACHC	Aluminium, Hollow, Spring Return	Signle Acting	30 - 60	76 - 153	11
NDAC	General	Double Acting	10 - 100	255 - 330	21
NDAH	Hollow	Double Acting	30 - 100	76 - 256	21
ADAC	Aluminium, Hollow	Double Acting	30 - 60	51 - 254	12

ALUMINUM RAMS

Spring Return, Single Acting
Max. Working Pressure: 700 bar / 10,000 psi
Capacity: 20 - 100 Ton
Stroke: 50 - 250 mm

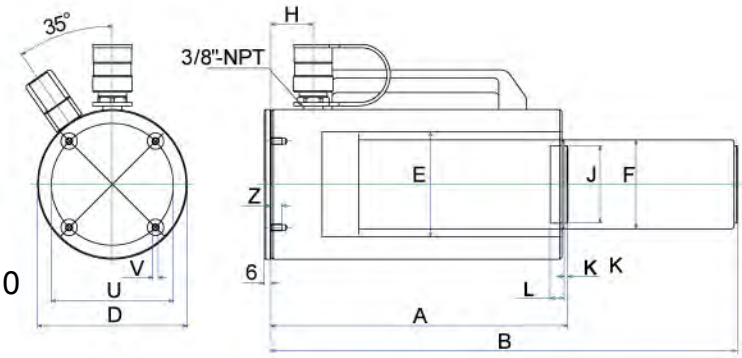

10

FEATURES:

- Half the weight of steel cylinders.
- Heavy duty spring for fast & full return.
- Large bearing surfaces for side load protection.
- Carrying handles standard on all models.
- Hard-Anodize coating reduces wear & corrosion.
- Stop rings for piston blow-out protection.
- Rod wiper protects inner cylinder from dirt.
- Capacity: 20 – 100 Ton
- Stroke: 2" – 10"

Hand Pumps

Base Plate Mounting Holes Dimensions(mm)

Cylinder Model/ Capacity (ton)	Bolt Circle U (mm)	Thread V (mm)	Thread Depth Z (mm)
SSA-20	70	M6x1.0	20
SSA-30	80	M6x1.0	10
SSA-50	110	M6×1.0	10
SSA-100	160	M6×1.0	10

SPECIFICATIONS

Model No.	Cylinder Capacity (tons)	STROKE (mm)	Cylinder Effective Area (cm^2)	Oil Capacity (c.c.)	Collapsed Height A (mm)	Extended Height B (mm)	Outside Diameter D (mm)	Cylinder Bore Diam E(mm)	Plunger Diameter F (mm)	Base to Advance Port H(mm)	Saddle Diameter J (mm)	Saddle Protrusion form Plunger K(mm)	Depth of Plumger Hole L(mm)	Weight (kgs)
SSA202	20	50	33.2	166	168	218	92	65	55	25	40	3	9	4.3
SSA204		100	33.2	332	218	318	92	65	55	25	40	3	9	5
SSA206		150	33.2	498	268	418	92	65	55	25	40	3	9	5.7
SSA208		200	33.2	664	318	518	92	65	55	25	40	3	9	6.5
SSA302	30	50	44.2	221	175	225	110	75	60	25	40	3	9	6
SSA304		100	44.2	442	225	325	110	75	60	25	40	3	9	6.9
SSA306		150	44.2	663	275	425	110	75	60	25	40	3	9	7.9
SSA308		200	44.2	884	325	525	110	75	60	25	40	3	9	8.8
SSA502	50	50	70.9	354.5	165	215	135	95	80	24	70	3	12	5.9
SSA504		100	70.9	709	215	315	135	95	80	24	70	3	12	7.7
SSA506		150	70.9	1063.5	265	415	135	95	80	24	70	3	12	12.7
SSA5010		250	70.9	1772.5	368	618	135	95	80	24	70	3	12	16.4
SSA1002	100	50	143.1	715.5	165	215	198	135	105	25	70	3	12	18.2
SSA1004		100	143.1	1431	215	315	198	135	105	25	70	3	12	20.5
SSA1006		150	143.1	2146.5	265	415	198	135	105	25	70	3	12	22.7
SSA10010		250	143.1	3577.5	368	618	198	135	105	25	70	3	12	30.9

ALUMINUM RAMS

Spring Return, Hollow Type
Max. Working Pressure: 700 bar / 10,000 psi
Capacity: 30 & 60 Tons
Stroke: 50 - 150 mm

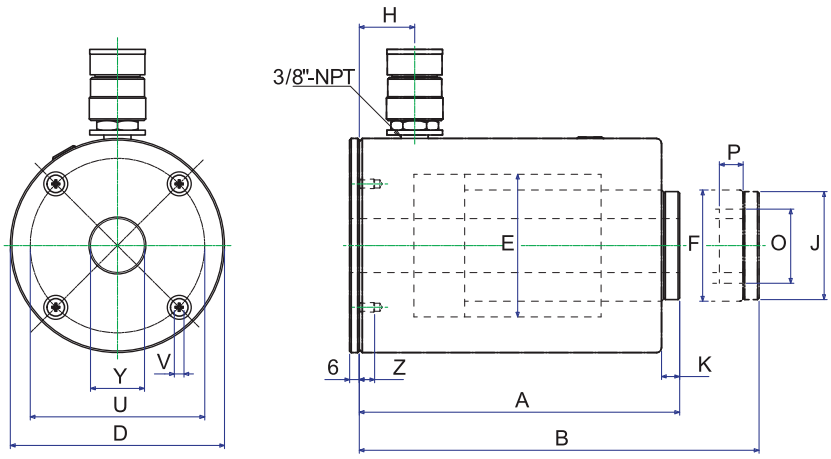

FEATURES:

- Half the weight of steel cylinders.
- Heavy duty spring for fast & full return.
- Chrome plated center hole for extra protection.
- Carrying handles standard on all models.
- Hard-Anodize coating reduces wear & corrosion.
- Stop rings for piston blow-out protection.
- Rod wiper protects inner cylinder from dirt.
- Capacity: 30 & 60 Tons
- Stroke: 3" & 6"

Base Plate Mounting Holes Dimensions(mm)

Cylinder Model/ Capacity (ton)	Bolt Circle U (mm)	Thread V (mm)	Thread Depth Z (mm)
ACHC-30	110	M6×1.0	10
ACHC-60	160	M6×1.0	10

Hand Pumps

QUICK CHART

Model No.	Capacity (tons)	STROKE (mm)	Collapsed Height (mm)	Extended Height (mm)	Weight (kgs)
ACHC302	30	50	202	252	10
ACHC306		150	327	477	14
ACHC602	60	50	219	269	19.5
ACHC606		150	319	469	25

SPECIFICATIONS

Model No.	Cylinder Capacity (tons)	STROKE (mm)	Cylinder Effective Area (cm^2)	Oil Capacity (c.c.)	Collapsed Height A (mm)	Extended Height B (mm)	Outside Diameter D (mm)	Cylinder Bore Diam E(mm)	Plunger Diameter F (mm)	Base to Advance Port H(mm)	Saddle Diameter J (mm)	Saddle Protrusion form Plunger K(mm)	Plunger Internal Thread O (ØUN)	Plunger Thread Length P (mm)	Center Hole Dia. Y (mm)	Model No.
ACHC302	30	50	47.7	238.5	202	252	135	90	70	35	68	11.5	1 7/8"-16	25	34	ACHC302
ACHC306		150	47.7	715	327	477	135	90	70	35	68	11.5	1 7/8"-16	25	34	ACHC306
ACHC602	60	50	89.5	447.5	219	269	198	125	100	35	89	14	2 3/4"-16	25	54	ACHC602
ACHC606		150	89.5	1342	319	469	198	125	100	35	89	14	2 3/4"-16	25	54	ACHC606

ALUMINUM RAMS

Hollow, Double Acting
Max. Working Pressure: 700 bar / 10,000 psi
Capacity: 30 & 60 Tons
Stroke: 50 - 250 mm

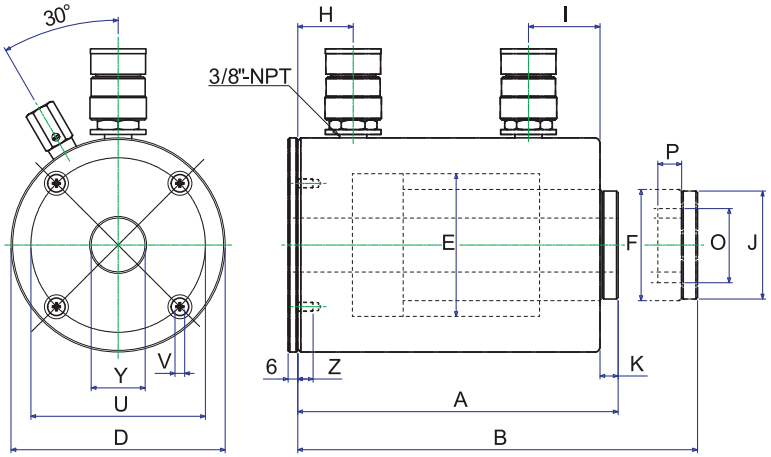

FEATURES:

- Half the weight of steel cylinders.
- Steel piston for protection against load damage.
- Chrome plated center sleeve for extra protection.
- Carrying handles standard on all models.
- Hard-Anodize coating reduces wear & corrosion.
- Stop rings for piston blow-out protection.
- Rod wiper protects inner cylinder from dirt.
- Capacity: 30 & 60 Tons
- Stroke: 2", 6" & 10"

Base Plate Mounting Holes Dimensions(mm)

Cylinder Model/ Capacity (ton)	Bolt Circle U (mm)	Thread V (mm)	Thread Depth Z (mm)
ADAC-30	110	M6×1.0	10
ADAC-60	160	M6×1.0	10

Electric Pumps

QUICK CHART

Model No.	Capacity (tons)	STROKE (mm)	Collapsed Height (mm)	Extended Height (mm)	Weight (kgs)
ADAC302	30	50	202	252	9.3
ADAC306		150	327	477	13
ADAC3010		250	430	680	16
ADAC602	60	50	219	269	15.5
ADAC606		150	319	469	23
ADAC6010		250	430	680	30.5

SPECIFICATIONS

Maximum Cylinder Capacity (tons)	Model No.	STROKE (mm)	Maximum Cylinder Capacity (tons)		Cylinder Effective Area (cm^2)		Oil Capacity (cm^3)		Collapsed Height A (mm)	Extended Height B (mm)	Outside Diameter D (mm)	Cylinder Bore Diam E(mm)	Plunger Diameter F (mm)	Base to Advance Port H(mm)	Top to Retract Port I(mm)	Saddle Diameter J (mm)	Saddle Protrusion form Plunger K(mm)	Plunger Internal Thread O (ØUN)	Plunger Thread Length P(mm)	Center Hole Diameter Y(mm)
			Push	Pull	Push	Pull	Push	Pull												
30	ADAC302	50	33	17.6	47.7	25.1	238	210	202	252	135	90	70	35	45	68	11.5	17/8"-16	25	34
	ADAC306	150					715	530	327	477	135	90	70	35	45	68	11.5	17/8"-16	25	34
	ADAC3010	250					1192	628	430	680	135	90	70	35	45	68	11.5	17/8"-16	25	34
60	ADAC602	50	62	31	89.5	44.2	447.5	353	219	269	198	125	100	35	45	89	14	23/4"-16	25	54
	ADAC606	150					1342	795	319	469	198	125	100	35	45	89	14	23/4"-16	25	54
	ADAC6010	250					2237	1236	430	680	198	125	100	35	45	89	14	23/4"-16	25	54

Load Return, Lock Nut Type
Max. Working Pressure: 700 bar / 10,000 psi
Capacity: 20 - 100 Ton
Stroke: 50 - 250 mm

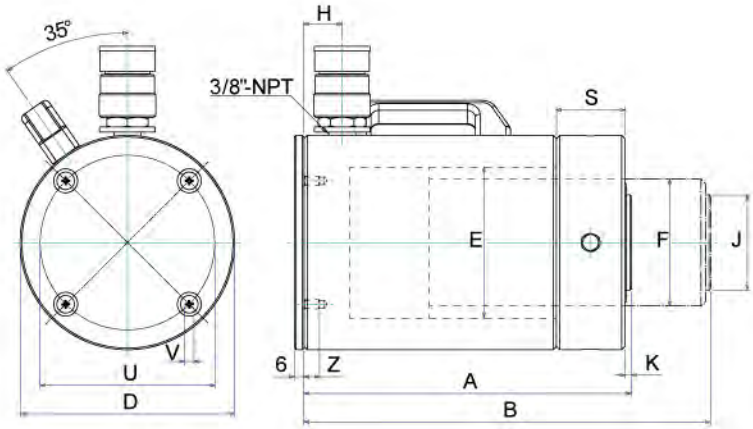

FEATURES:

- Half the weight of steel cylinders.
- Locknuts offer extended load holding.
- Large bearing surfaces for side load protection.
- Carrying handles standard on all models.
- Hard-Anodize coating reduces wear & corrosion.
- Stop rings for piston blow-out protection.
- Heavy duty spring for full and fast return.
- Capacity: 20 - 100 Ton
- Stroke: 2"– 10"

Electric Pumps

Base Plate Mounting Holes Dimensions(mm)

Cylinder Model/ Capacity (ton)	Bolt Circle U (mm)	Thread V (mm)	Thread Depth Z (mm)
ALNC-20	70	M6×1.0	10
ALNC-30	80	M6×1.0	10
ALNC-50	110	M6×1.0	10
ALNC-100	160	M6×1.0	10

SPECIFICATIONS

Model No.	Cylinder Capacity (tons)	STROKE (mm)	Cylinder Effective Area (cm^2)	Oil Capacity (cm^3)	Collapsed Height A (mm)	Extended Height B (mm)	Outside Diameter D (mm)	Cylinder Bore Diam E(mm)	Plunger Diameter (threaded) F(mm)	Base to Advance Port H(mm)	Saddle Diameter J (mm)	Saddle Protrusion form Plunger K(mm)	Lock Nut Hight S(mm)	Weight (kgs)
ALNC202	20	50	33.2	166	212	262	92	65	Tr55×3	25	40	3	25	4.8
ALNC204		100	33.2	332	262	362	92	65	Tr55×3	25	40	3	25	5.5
ALNC206		150	33.2	498	312	462	92	65	Tr55×3	25	40	3	25	6.3
ALNC208		200	33.2	664	412	612	92	65	Tr55×3	25	40	3	25	6.9
ALNC302	30	50	44.2	221	205	255	110	75	Tr60×3	25	40	3	30	6.9
ALNC304		100	44.2	442	255	355	110	75	Tr60×3	25	40	3	30	7.7
ALNC306		150	44.2	663	305	455	110	75	Tr60×3	25	40	3	30	8.6
ALNC308		200	44.2	884	355	555	110	75	Tr60×3	25	40	3	30	9.6
ALNC502	50	50	70.9	354.5	212	262	135	95	Tr80×4	30	60	3	43	9.3
ALNC504		100	70.9	709	262	362	135	95	Tr80×4	30	60	3	43	10.7
ALNC506		150	70.9	1063.5	312	462	135	95	Tr80×4	30	60	3	43	13.7
ALNC508		200	70.9	1418	362	562	135	95	Tr80×4	30	60	3	43	14.5
ALNC5010		250	70.9	1772.5	412	662	135	95	Tr80×4	30	60	3	43	16.5
ALNC1002	100	50	143	715	235	285	200	135	Tr105×6	45	70	3	51	21.7
ALNC1004		100	143	1430	285	385	200	135	Tr105×6	45	70	3	51	25.2
ALNC1006		150	143	2145	335	485	200	135	Tr105×6	45	70	3	51	29.2
ALNC1008		200	143	2860	385	585	200	135	Tr105×6	45	70	3	51	33
ALNC10010		250	143	3575	438	688	200	135	Tr105×6	45	70	3	51	35.4

MODEL: NSHS-SERIES

Capacity: 12-100 Ton
Stroke: 8-155 mm
Max. working pressure:
10,000 psi / 700 bar

All Rams as single acting with spring return.
Pistons hard chromed.
Rams inside rollpolished.
Rams outside blasted and black nitriding finish.

MODEL:NSHS

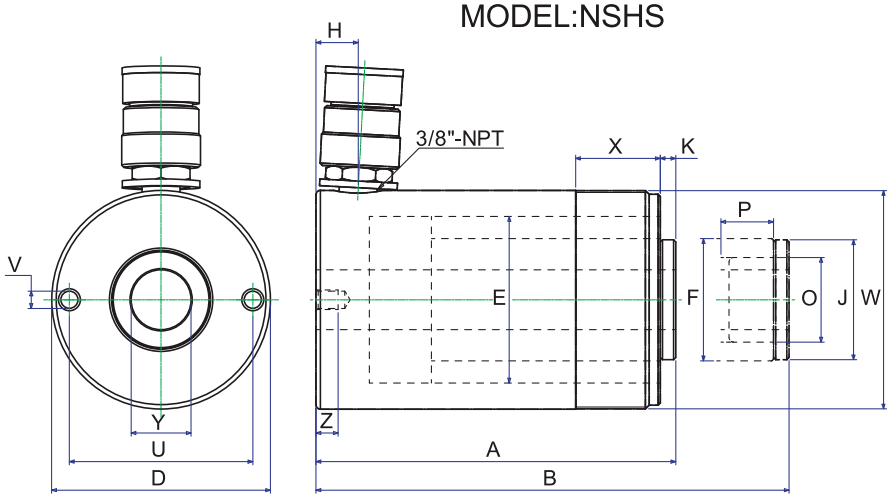

NSHS-SERIES, HOLLOW PLUNGER CYLINDERS

MODEL	CAPACITY TON	STROKE (mm)	OIL CAP (cm^3)	A HEIGHT(mm) RETRACTED	B HEIGHT(mm) EXTENDED	D Ø mm	E Ø mm	F Ø mm	H mm	J mm	K mm
NSHS120	12	8	14.8	60	68	73	54.1	35	12.5	—	—
NSHS121		42	79	120	162		55		19		
NSHS1211		42	79	120	162		55		19		
NSHS123		76	143.2	184	260		55		19		
NSHS202	20	51	173	162	213	98.5	75	55	19	54	7
NSHS206		155	527	306	461						
NSHS302	30	65	310	178.5	243.5	117	90	65	21.5	59.9	0.5
NSHS306		160	763	330	490						
NSHS603	60	76	680	247.5	323.5	158.6	125	90	32	89	12.5
NSHS606		152	1360	323.5	475.5						
NSHS1003	100	76	1085	254	330	213	165	125	38	125	12

NSLS / NSCS-SERIES, Flat & Compact

MODEL	CAPACITY TON	STROKE (mm)	OIL CAP (cm^3)	A HEIGHT(mm) RETRACTED	B HEIGHT(mm) EXTENDED	C mm	D mm	E Ø mm	F Ø mm	H mm	K mm
NSLS50	5	6	4.5	33	39	28.5	58.5×44	31	25.4	16	1
NSLS100	10	12	18.0	42	54	36.5	82.5×60	44	38	19	1
NSLS200	20	12	34.0	51	63	49.3	100×78	60	50.8	19	1
NSLS300	30	13	54.0	58	71	52.3	117.5×95	73	63.5	19	2
NSLS500	50	16	113.0	66	82	66.5	145×115	95	70	19	2
NSLS750	75	16	180.0	79	95	76.2	170×145	120	82.5	19	2
NSLS1000	100	16	229.0	85	101	76.2	185×160	135	92	19	2
NSLS1500	150	17	363.0	100	117	117	225×195	165	115	23	2
NSCS101	10	38	55.0	88	126	—	78	42.8	38	17.5	5
NSCS201	20	45	127.0	98	143	—	97	60	50.8	17.5	3
NSCS302	30	62	274.0	117	179	—	107	75	63.5	19	3
NSCS502	50	60.5	429.0	122	182	—	127	95	70	19	2
NSCS1002	100	58	830.0	141.5	199.5	—	165	135	92	19	1.5

MODEL: NSCS-SERIES

Capacity: 10-100 Ton
Stroke: 38-62 mm
Max. working pressure:
10,000 psi / 700 bar

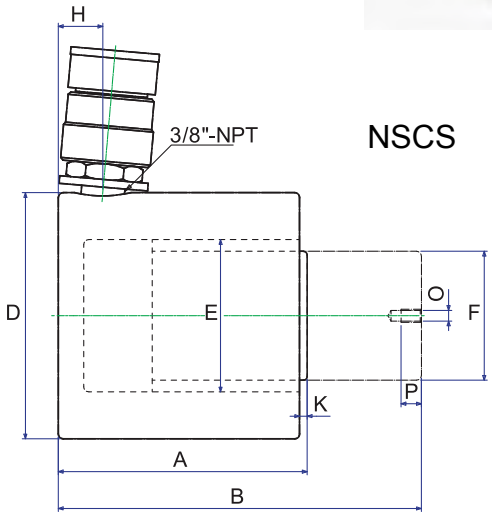

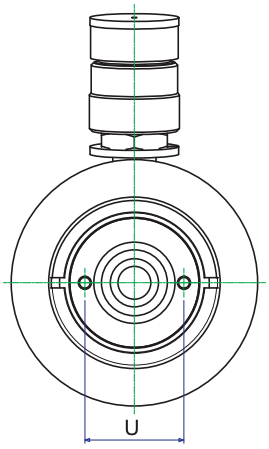

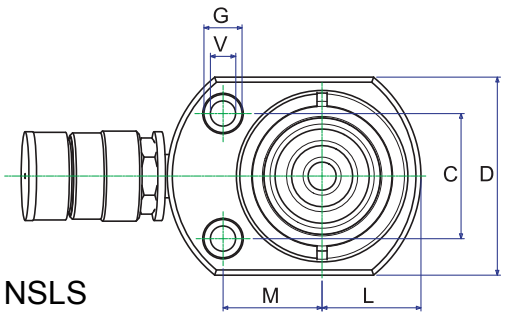

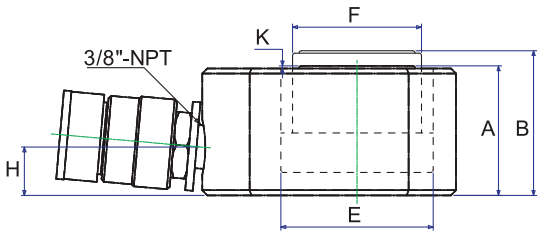

O Ø UN	P mm	U mm	V Ø UNC	Z mm	W Ø UN	X mm	Y Centre Hole Ø mm	WEIGHT (kgs)	MODEL
3/4"-16	16	50.8	5/16"-18	9	2 3/4"-16	30	19.5	1.5	NSHS120
—	—			12.7				3	NSHS121
3/4"-16	16			12.7				3	NSHS1211
—	—			12.7				4.2	NSHS123
1 9/16"-16	25	82.6	3/8"-16	9.4	3 7/8"-12	38	27	7.5	NSHS202
								13.5	NSHS206
1 7/8"-16	25	92	3/8"-16	14	4 1/2"-12	42	34	11	NSHS302
								20.4	NSHS306
2 3/4"-16	25	130	1/2"-12	14	6 1/4"-12	50	54	26.4	NSHS603
								34	NSHS606
4"-16	30	178	5/8"-11	19	8 3/8"-12	60	79	50.1	NSHS1003

V Ø mm	G Ø mm	O Ø mm	P Ø mm	U mm	L mm	M mm	WEIGHT (kgs)	MODEL
5.3	9.5	—	—	—	22	22	1	NSLS50
7.5	11	—	—	—	30	34	1.4	NSLS100
10	15	—	—	—	39	39	3.1	NSLS200
10	16	—	—	—	47.5	47.5	4.5	NSLS300
11	19	—	—	—	57.5	58	6.8	NSLS500
13.5	20.5	—	—	—	72.5	70	11.3	NSLS750
13.5	20.5	—	—	—	80	78	14.5	NSLS1000
13.5	20.5	—	—	—	97.5	85	26.3	NSLS1500
—	—	M4	8	26	—	—	4.1	NSCS101
—	—	M5	9	39	—	—	5	NSCS201
—	—	M5	8	39	—	—	6.8	NSCS302
—	—	M5	8	39	—	—	10.9	NSCS502
—	—	M8	10	55	—	—	22.7	NSCS1002

MODEL: NSLS-SERIES

Capacity: 5-150Ton
Stroke: 6-16 mm
Max. working pressure:
10,000 psi / 700 bar

All Rams as single acting with spring return.
Pistons hard chromed.
Rams inside rollpolished.
Rams outside blasted and black nitriding finish.

MODEL:NSSS -SERIES

Capacity: 5-100 Ton
Stroke: 25-362 mm
Max. working pressure:
10,000 psi / 700 bar

All Rams as single acting with spring return.
Pistons hard chromed.
Rams inside rollpolished.
Rams outside blasted and black nitriding finish.

For NSSS 5, 10, 15&25

Piston Clevis

Model	A	B	C	D	E	F
BCR5	28	41	14	16	16	25
BCR10	43	59	25	22.3	25	34
BCR15	43	62	25	22.3	25	37
BCR25	57	74	38	31.8	31	43

For NSSS5, 10, 15&25

Base Clevis

Model	A	B	C	D	E	F
BC5	44	48	14	16	16	25
BC10	63	67	25	22.3	25	35
BC15	76	67	25	22.3	25	35
BC25	95	79	38	31.8	31	41

MODEL	CAPACITY TON	STROKE (mm)	OIL CAP (cm^3)	A HEIGHT(mm) RETRACTED	B HEIGHT(mm) EXTENDED	D Ømm	E Ømm	F Ømm	H mm	J mm	K mm	O Ø UN
NSSS51	4.5	26	17	110	136	38	28.6	25.4	19	25	6	¾"-16
NSSS53	5	76	54	165	241		30					
NSSS55		127	90	216	343							
NSSS57		183	129	273	456							
NSSS59		232	164	324	556							
NSSS101	10	25.4	36.5	90	115.4	57	42.8	38	19	-	-	#10-24UN
NSSS102		51	73	121	172					40	6	1"-8
NSSS104		101	145	171	272							
NSSS106		152.5	242	247	399.5		45					
NSSS108		203.5	323	298	501.5							
NSSS1010		255.5	406	350	605.5							
NSSS1012		305.5	486	400	705.5							
NSSS1014		356.5	567	451	807.5							
NSSS151	15	26.5	63	124	150.5	73	55	40	19	38	9.6	1"-8
NSSS152		52.5	125	149.6	202.1							
NSSS154		102.5	243	200	302.5							
NSSS156		153	363	271.6	424.6				25			
NSSS158		203.5	483	322	525.5							
NSSS1510		254.5	604	373	627.5							
NSSS1512		305	724	424	729							
NSSS1514		355.7	845	474.6	830.3							
NSSS251	25	25.5	98	139.5	165	88	70	55	25	50	10.5	1½"-16
NSSS252		51	196	165	216							
NSSS254		102	392	216	318							
NSSS256		158.5	610	273	431.5							
NSSS258		209.5	806	324	533.5							
NSSS2510		260.5	1002	375	635.5							
NSSS2512		311	1196	425.5	736.5							
NSSS2514		361.5	1390.5	476	837.5							
NSSS308	30	209.5	925	387.5	597	103	75	60	57	50	10.5	1½"-16
NSSS502	50	51	361	177	228	127	95	80	33	70	3	-
NSSS504		101.5	719	229	330.5							
NSSS506		157.5	1116	283	440.5							
NSSS5013		335.5	2377	461	796.5							
NSSS756	75	155	1752	285	440	152	120	95	30	70	3	-
NSSS7513		333.5	3770	491	824.5							
NSSS1006	100	170	2432	358	528	177	135	105	40	70	3	-
NSSS10010		260	3720	448	708							

BA10 for NSSS102 through NSSS1014
BA25 for NSSS252 through NSSS2514

Cylinder Bases

Model	A	B	C	D
BA10	9	110	230	58
BA25	16	126	280	89

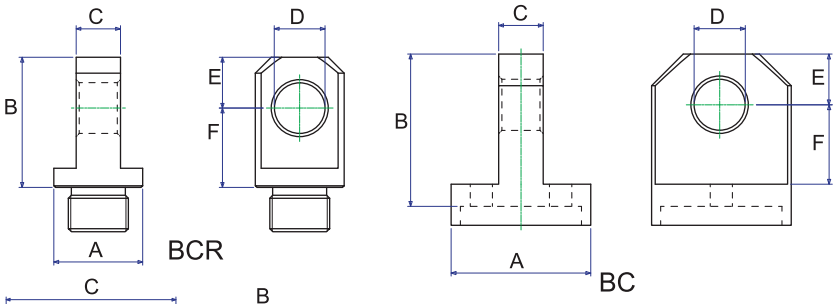

ATS10 for NSSS102 through NSSS1014
ATS25 for NSSS251 through NSSS2514

Cylinder Bases

Model	A	B	C
ATS10	35	11.5	22
ATS25	50	14	36

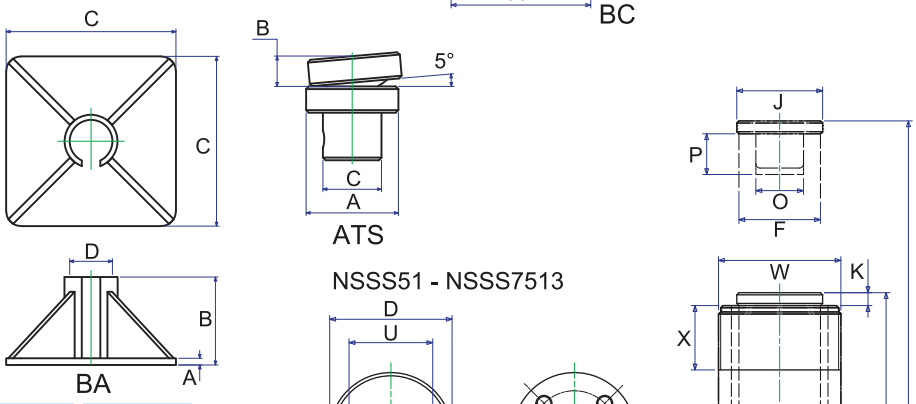

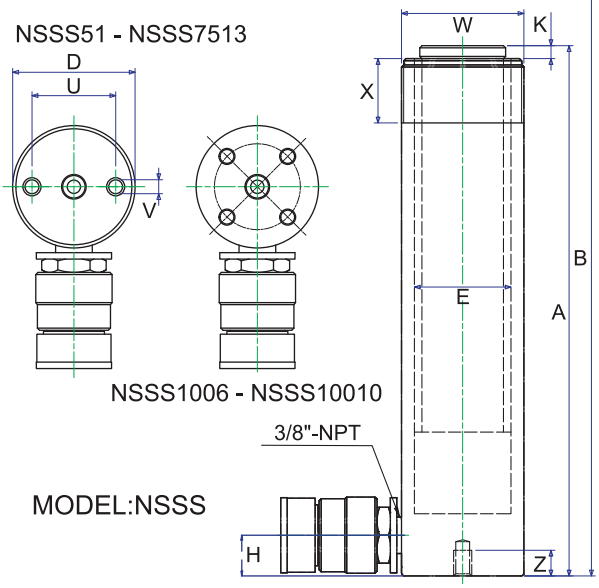

P mm	U mm	V Ø UNC	Z mm	W Ø UN	X mm	WEIGHT (Kgs)	MODEL
14	25	1/4"-20	14	1 1/2"-16	28	1	NSSS51
						1.5	NSSS53
						1.9	NSSS55
16						2.4	NSSS57
						2.8	NSSS59
6.5	39	5/16"-18	13	2 1/4"-14	30	1.8	NSSS101
19						2.3	NSSS102
						3.3	NSSS104
						4.4	NSSS106
						5.4	NSSS108
						6.4	NSSS1010
						6.8	NSSS1012
						8.2	NSSS1014
25.4	47.7	3/8"-16	13	2 3/4"-16	30	3.3	NSSS151
						4.1	NSSS152
						5.0	NSSS154
						6.8	NSSS156
						8.2	NSSS158
						9.5	NSSS1510
						10.9	NSSS1512
						11.8	NSSS1514
25.4	58	1/2"-13	19	3 5/16"-12	50	5.9	NSSS251
						6.4	NSSS252
						8.2	NSSS254
						10	NSSS256
						12.2	NSSS258
						14.1	NSSS2510
						16.3	NSSS2512
						17.7	NSSS2514
25.4	-	-	-	4"-12	50	18.1	NSSS308
-	95	1/2"-13	19	5"-12	55	15	NSSS502
						19.1	NSSS504
						23.1	NSSS506
						37.6	NSSS5013
-	-	-	-	5 3/4"-12	45	29.5	NSSS756
						59	NSSS7513
-	139	3/4"-10	25	6 7/8"-12	45	59	NSSS1006
						72.6	NSSS10010

Hand Pumps

LOCK NUT CYLINDERS

Capacity: 50 - 1,000 Tons
Stroke: 50 - 300 mm
Max. working pressure: 700 bar
Load Return

FEATURES:

- Single-acting, load return.
- Safety Lock nut for mechanical load holding.
- Chrome plated for preventing corrosion, rusted and lower friction for smoother opertation.
- Withstands sideload forces up to 5% of rated cylinder capacity without scoring.
- Stop ring for piston blow-out protection.
- Interchangeable, hardened, grooved saddle are standard.
- High flow coupler and dust cap included on all models.
- Capacity: 50 – 1000 Tons.

QUICK CHART

Model No.	Capacity (tons)	STROKE (mm)	Collapsed Height (mm)	Extended Height (mm)	Weight (kgs)
JLLC502	50	50	164	214	15
JLLC506		150	264	414	25
JLLC5010		250	364	614	35
JLLC1002	100	50	187	237	30
JLLC1006		150	287	437	48
JLLC10010		250	387	637	64
JLLC1502	150	50	209	259	53
JLLC1506		150	309	459	78
JLLC15012		300	459	759	117
JLLC2002	200	50	243	293	83
JLLC2006		150	343	493	117
JLLC20012		300	493	793	170
JLLC3002	300	50	295	345	173
JLLC3006		150	395	545	233
JLLC30012		300	545	845	323
JLLC4002	400	50	335	385	250
JLLC4006		150	435	585	327
JLLC40012		300	585	885	441
JLLC5002	500	50	375	425	367
JLLC5006		150	475	625	466
JLLC50012		300	625	925	617
JLLC6002	600	50	395	445	446
JLLC6006		150	495	645	562
JLLC60012		300	645	945	737
JLLC8002	800	50	455	505	709
JLLC8006		150	555	705	870
JLLC80012		300	705	1005	1110
JLLC10002	1000	50	495	545	949
JLLC10006		150	595	745	1141
JLLC100012		300	745	1045	1430

Gauge / Adaptors / Valves

LOCK NUT CYLINDERS

MODEL:JLLC50 - JLLC200

TSA-Optional Tilt Saddle

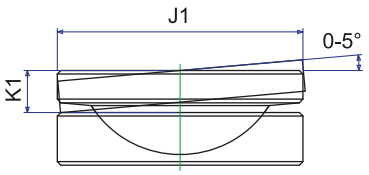

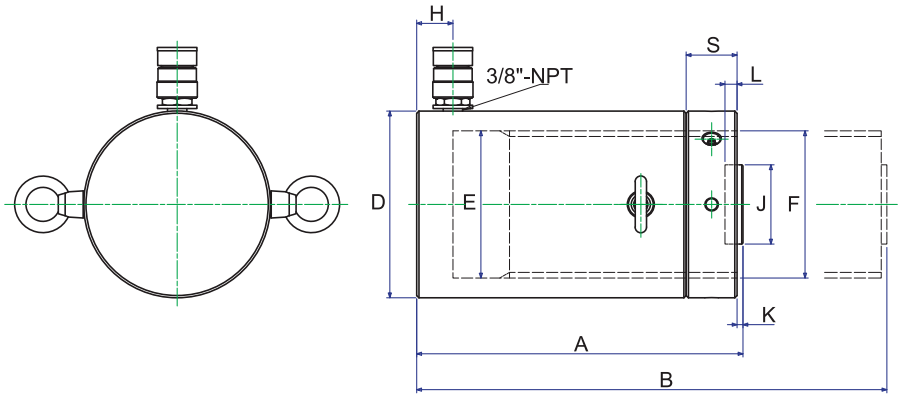

MODEL:JLLC300 - JLLC1000

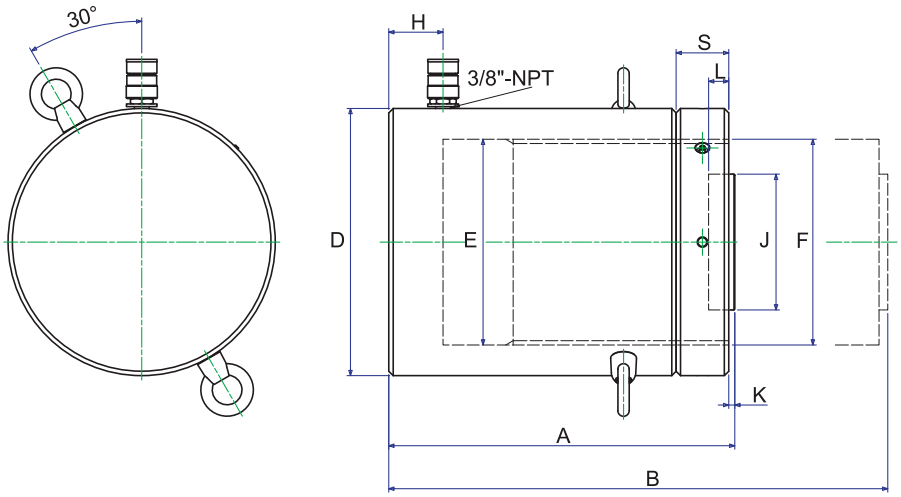

Model No.	Cylinder Effective Area (cm²)	Oil Capacity (c.c.)	Outside Diameter D (mm)	Cylinder Bore Diam E (mm)	Plunger Diameter F (mm)	Base to Advance Port H (mm)	Saddle Diameter J (mm)	Saddle Protrusion form Plunger K (mm)	Depth of Plumger Hole L (mm)	Lock Nut Hight S (mm)	Model No.	Optional Tilt Saddle		
												Dia. J1 (mm)	Height K1 (mm)	Model Number
JLLC502	70.9	354.5	125	95	Tr95×4	20	70	2	13	35	JLLC502	70	24	TSA-100
JLLC506	70.9	1063.5	125	95	Tr95×4	20	70	2	13	35	JLLC506	70	24	TSA-100
JLLC5010	70.9	1772.5	125	95	Tr95×4	20	70	2	13	35	JLLC5010	70	24	TSA-100
JLLC1002	133	665	165	130	Tr130x4	32	70	2	13	45	JLLC1002	70	24	TSA-100
JLLC1006	133	1995	165	130	Tr130x4	32	70	2	13	45	JLLC1006	70	24	TSA-100
JLLC10010	133	3325	165	130	Tr130x4	32	70	2	13	45	JLLC10010	70	24	TSA-100
JLLC1502	201	1005	205	160	Tr160x6	49	125	2	25	45	JLLC1502	125	20	TSA-200
JLLC1506	201	3015	205	160	Tr160x6	49	125	2	25	45	JLLC1506	125	20	TSA-200
JLLC15012	201	6030	205	160	Tr160x6	49	125	2	25	45	JLLC15012	125	20	TSA-200
JLLC2002	269	1345	235	185	Tr185x6	52	125	2	25	50	JLLC2002	125	20	TSA-200
JLLC2006	269	4035	235	185	Tr185x6	52	125	2	25	50	JLLC2006	125	20	TSA-200
JLLC20012	269	8070	235	185	Tr185x6	52	125	2	25	50	JLLC20012	125	20	TSA-200
JLLC3002	433.5	2167.5	305	235	Tr235x6	62	160	5	25	60	JLLC3002	195	75	TSA-300
JLLC3006	433.5	6502.5	305	235	Tr235x6	62	160	5	25	60	JLLC3006	195	75	TSA-300
JLLC30012	433.5	13005	305	235	Tr235x6	62	160	5	25	60	JLLC30012	195	75	TSA-300
JLLC4002	551	2755	355	265	Tr265x6	76	160	5	25	70	JLLC4002	225	85	TSA-400
JLLC4006	551	8265	355	265	Tr265x6	76	160	5	25	70	JLLC4006	225	85	TSA-400
JLLC40012	551	16530	355	265	Tr265x6	76	160	5	25	70	JLLC40012	225	85	TSA-400
JLLC5002	706.5	3532.5	395	300	Tr300x6	81	180	5	25	80	JLLC5002	250	90	TSA-500
JLLC5006	706.5	10597.5	395	300	Tr300x6	81	180	5	25	80	JLLC5006	250	90	TSA-500
JLLC50012	706.5	21195	395	300	Tr300x6	81	180	5	25	80	JLLC50012	250	90	TSA-500
JLLC6002	854.9	4274	425	330	Tr330x6	89	195	5	25	85	JLLC6002	275	95	ATS-600
JLLC6006	854.9	12823	425	330	Tr330x6	89	195	5	25	85	JLLC6006	275	95	ATS-600
JLLC60012	854.9	25646	425	330	Tr330x6	89	195	5	25	85	JLLC60012	275	95	ATS-600
JLLC8002	1194	5970	505	390	Tr390x6	105	225	5	25	100	JLLC8002	320	120	ATS-800
JLLC8006	1194	17910	505	390	Tr390x6	105	225	5	25	100	JLLC8006	320	120	ATS-800
JLLC80012	1194	35820	505	390	Tr390x6	105	225	5	25	100	JLLC80012	320	120	ATS-800
JLLC10002	1451.5	7257	555	430	Tr430×6	108	250	5	25	110	JLLC10002	360	135	ATS-1000
JLLC10006	1451.5	21772	555	430	Tr430×6	108	250	5	25	110	JLLC10006	360	135	ATS-1000
JLLC100012	1451.5	43544	555	430	Tr430×6	108	250	5	25	110	JLLC100012	360	135	ATS-1000

LOCK NUT CYLINDERS

Capacity: 60 - 500 Tons
Stroke: 45 & 50 mm
Max. working pressure: 700 bar
Load Return

MODEL:JLPC60 - 500

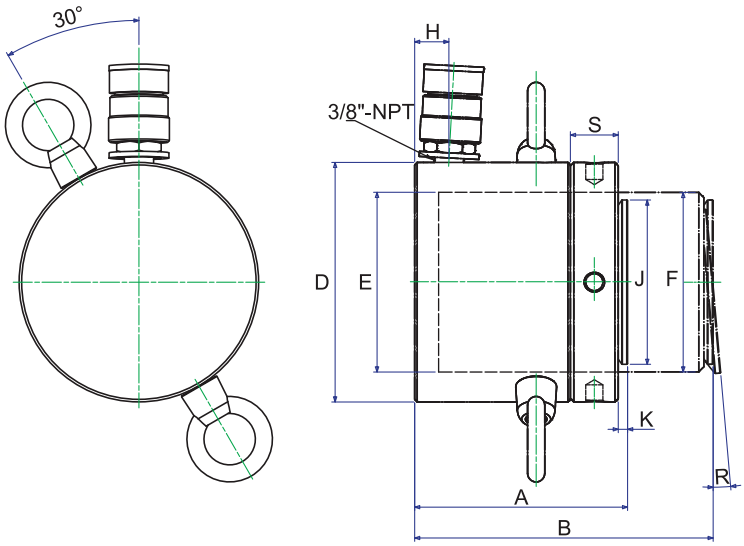

FEATURES:

- Extremely low height for use in confined areas
- Single-acting, load return.
- Lock nut for positive and safe load holding over a long period of time.
- Chrome plated for preventing corrosion, rusted and lower friction for smoother operation.
- Withstands sideload forces up to 3% of rated cylinder capacity without scoring.
- Overflow port functions as a stroke limiter.
- High flow coupler and dust cap included on all models
- Capacity: 60 – 500 Tons.

Gauge / Adaptors / Valves

Electric Pumps

QUICK CHART

Model No.	Capacity (tons)	STROKE (mm)	Collapsed Height (mm)	Extended Height (mm)	Weight (kgs)
JLPC602	60	50	124	174	15
JLPC1002	100		137	187	26
JPLC1502	150	45	148	193	44
JLPC2002	200		155	200	57
JLPC2502	250		159	204	74
JLPC4002	400		178	223	134
JLPC5002	520		192	237	189

Model No.	Cylinder Capacity (tons)	STROKE (mm)	Cylinder Effective Area (cm^2)	Oil Capacity (c.c.)	Collapsed Height A (mm)	Extended Height B (mm)	Outside Diameter D (mm)	Cylinder Bore Diam E(mm)	Plunger Diameter F (mm)	Base to Advance Port H (mm)	Saddle Diameter J (mm)	Saddle Protrusion form Plunger K (mm)	Saddle Max. Tilt Angle R	Lock Nut Height S (mm)	Model No.
JLPC602	60	50	86.6	433	125	175	140	105	Tr105x6	20	96	6	5°	28	JLPC602
JLPC1002	100		143	715	137	187	175	135	Tr135x6	21	126	8	5°	31	JLPC1002
JLPC1502	150	45	214	963	148	193	220	165	Tr165x6	27	150	9	5°	40	JLPC1502
JLPC2002	200		283	1273.5	155	200	245	190	Tr190x6	30	180	10	5°	43	JLPC2002
JLPC2502	250		380	1710	159	204	275	215	Tr215x6	32	200	11	5°	44	JLPC2502
JLPC4002	400		572	2574	178	223	350	270	Tr270x6	39	250	11	5°	55	JLPC4002
JLPC5002	520		706.5	3179	192	237	400	300	Tr300x6	48	285	10	5°	62	JLPC5002

DOUBLE ACTION CYLINDERS

MODEL: NDAC

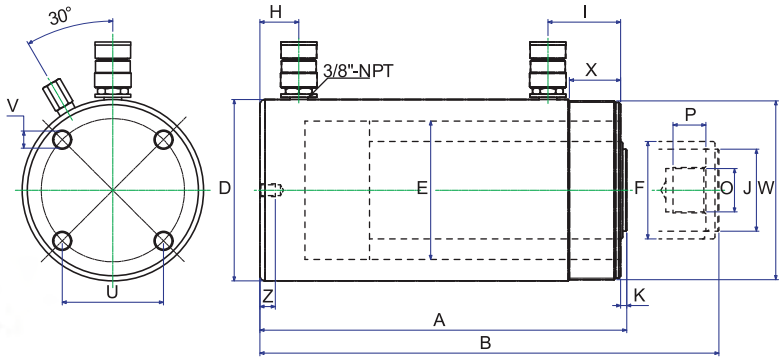

MODEL: NDAH

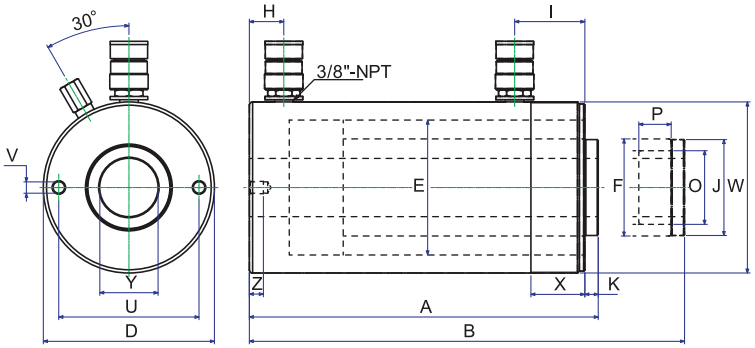

FEATURES:

DAC Series

- Capacity: 10 - 100 Tons.
- Stroke: 255 - 330 mm.
- Max. working pressure: 10,000 psi / 700 bar
- Perfect for Construction, Shipyard, utility, mining and equipment maintenance.
- Piston hard chromed.
- Ram inside rollpolished.
- Ram outside blasted and black nitriding finish.

Double-Acting Long Stroke Cylinders

Model No.	Cap. (Ton) Push	Cap. (Ton) Pull	Stroke (mm)	Oil Cap. (cm^3) Push	Oil Cap. (cm^3) Pull	A Height(mm) Retracted	B Height(mm) Extended	D Ømm	E Ømm	F Ømm	H mm	I mm	J Ømm	K mm	O ØUN	P mm	U Ømm	V Ø UNC	Z mm	W ØUN	X mm	Y Center Hole (Ø mm)	Weight (kgs)
NDAC1010	10	4	251	399	144	408	659	78	45	35	36.5	55	40	8	1"-8	25.4	--	--	--	2 1/4"-14	27	--	13
NDAC1012			301	478	172	458	759																15
NDAC308	30	14	209	923	426	387	596	103	75	55	25	75	50	12	1 1/2"-16	25.4	--	--	--	4"-12	50	--	20
NDAC3014			368	1625	751	547	915																29
NDAC506	50	14	150	1062	309	331	481	127	95	80	30	70	70	5	1"-12	25.4	88.9	5/8"-11	22	5"-12	50	--	29
NDAC5013			330	2338	680	511	841																43
NDAC5018			470	3330	968	675	1145				52												59
NDAC756	75	29.5	155	1752	654	348	503	152	120	95	30	75	70	5	1"-12	38	114.3	3/4"-10	22	5 3/4"-12	45	--	40
NDAC7513			333	3764	1405	526	859																58
NDAC1006	100	43	160	2289	1155	358	518	177	130	95	38	71	80	5	1 3/4"-12	35	139.7	3/4"-10	25	6 7/8"-12	50	--	59
NDAC10013			330	4721	2383	528	858																83

Doubel-Acting , Hollow Plunger Cylinders

Model No.	Cap. (Ton) Push	Cap. (Ton) Pull	Stroke (mm)	Oil Cap. (cm^3) Push	Oil Cap. (cm^3) Pull	A Height(mm) Retracted	B Height(mm) Extended	D Ømm	E Ømm	F Ømm	H mm	I mm	J Ømm	K mm	O ØUN	P mm	U mm	V Ø UNC	Z mm	W ØUN	X mm	Y Center Hole (Ø mm)	Weight (kgs)
NDAH307	30	21	178	849	541	330	508	117	90	65	21.5	60.5	59.5	0.5	1 7/8"-16	25	92	3/8"-16	14	4 1/2"-12	42	34	22
NDAH3010			257	1226	782	431	688							10									27
NDAH603	60	41	89	797	526	247.5	336.5	158.6	125	90	32	65	89	12.5	2 3/4"-16	25	130	1/2"-13	14	6 1/4"-12	50	54	28
NDAH606			165	1477	975	323.5	488.5																35
NDAH6010			257	2300	1518	437.5	694.5																45
NDAH1003	100	64	76	1086	692	254	330	213	265	125	38	82	125	12	4"-16	30	178	5/8"-11	19	8 3/8"-12	60	79	52
NDAH1006			152	2172	1384	325	477																65
NDAH10010			256	3656	2331	462	718																88

TORQUE Elite

HYDRAULIC EASY PULLERS

The first 2/3 way Hydraulic Easy Puller in the world !

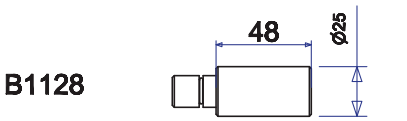

B1128

Extension Rod for 4, 6, 8 & 12 Tons Pullers

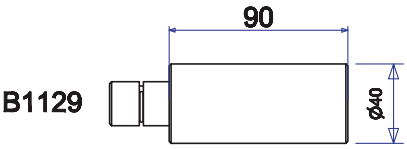

B1129

Extension Rod for 20 & 30 Tons Pullers

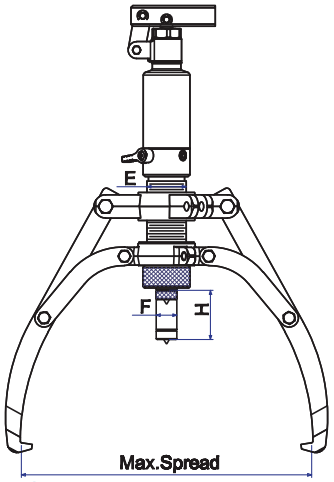

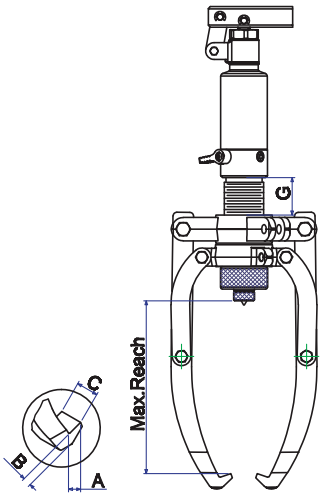

SIMPLE, EASY AND SAFE PULLING JOB

Equipped with fast-acting Jaws, Powerram's unique patented Easy Pullers are dedicated for the absolute user-friendly and safe dismounting job in the market today. The most simple and efficient design - fast acting Jaws bring the users to position the puller on the part quickly and correctly by one man operating as well.

USER-CONVENIENTLY:

- Absolutely user-conveniently raised from fast-acting and self-positioning jaws, locking on the part with just one man operating only.
- 360° Rotary Handle socket enables the user to operate the pumping in all directions.
- Spring loaded live centring nut for easily positioning without missing (removable).
- Optional hydraulic force are available from 4 Ton to 30 Ton versions.
- The patented Two stages stroking design on 20 & 30 Ton versions offers quickly connecting to the object and high hydraulic force for pulling to save much pumping time and efforts.
- Attached extension rods allow the user to extend the stroke according to the needs.
- User-Friendly package with the well assembled puller inside for immediately operating and easily repackaging after objects pulled out.

SAFE:

- The self-contained Hydraulic pump equipped with the built-in safety valve is designed to prevent the overload to the puller.
- The built-in safety valve cannot be rebuilt by user in any ways to prevent any injury and damage to the user and/or the puller.
- Self-locking jaws eliminate the puller jaw slipping off under loading and/or hydraulic force releasing.

COST SAVING:

- The built-in safety valve keeps away from the overloading always to ensure all spare parts working normally.
- Self-positioning & centring prevent the damage to the shaft as well.
- Service life of puller is prolonged by the built-in safety valve.
- Impact packaging conveniently positioning, efficiently pulling cause much save on manpower and operating time.
- The first 2 / 3 way Hydraulic Easy Puller brings the users the best option for much cost saving.

TECHNICAL DATA

Capacity	Model No.	Reach (Max. mm)	Spread (Max. mm)	Stroke (mm)	Pump Tip (mm)			Jaw Tip (mm)			Weight (kg)
				H	E	F	G	A	B	C	
4 Ton	PME400	190	315	60	42	22	40	13	10	22	8.0
6 Ton	PME600	230	390	70	45	23	50	13	10	22	9.8
8 Ton	PME800	280	460	85	50	25	70	13	13	27.5	11.7
12 Ton	PME1200	300	515	85	60	28	70	15	16.5	29	14.8
20 Ton	PME2000	325	520	111	80	40	62	20	27	33	25.7
30 Ton	PME3000	415	620	111	98	50	85	20	27	38	36.0

Patented in USA, Germany, Taiwan, P.R.C.....etc.

HYDRAULIC EASY PULLERS

The first 2/3 way Hydraulic Easy Puller in the world !

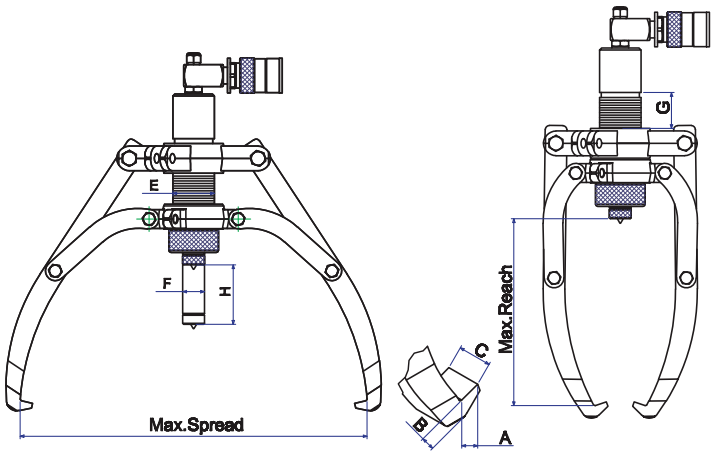

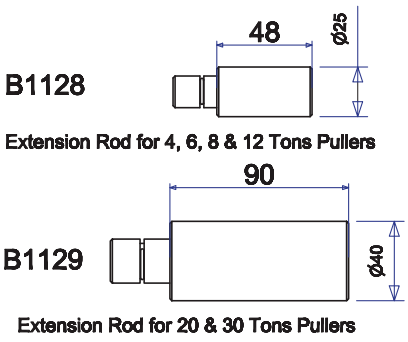

SIMPLE, EASY AND SAFE PULLING JOB

Equipped with Fast-acting Jaws, Powerram's unique patented Easy Pullers are dedicated for the absolute user-friendly and safe dismounting job in the market today. The most simple and efficient design - fast acting Jaws bring the users to position the puller on the part quickly and correctly by one man operating as well.

USER-CONVENIENTLY:

- Absolutely user-conveniently raised from fast-acting and self-positioning jaws, locking on the part with just one man operating only.
- 360° Swivel connectring adaptor minimizes the space limited for connecting with the separate hydaulic pump.
- Spring loaded live centring nut for easily positioning without missing (removable).
- Optional hydraulic force are available from 4 Ton to 30 Ton versions.
- Light Aluminum hand pump provides the carrying convenience to the end users.
- Attached extension rods allow the user to extend the stroke according to the needs.

SAFE:

- The Hydraulic pump equipped with the safety valve and pressure gauge is designed to prevent the overload to the puller.
- The built-in safety valve prevents any injury and damage to the user and/or the puller.
- Self-locking jaws eliminate the puller jaw slipping off under loading and/or hydraulic force releasing.

COST SAVING:

- The built-in safety valve keeps away from the overloading always to ensure all spare parts working normally.
- Self-positioning & centring prevent the damage to the shaft as well.
- Service life of puller is prolonged by the built-in safety valve.
- Conveniently positioning, efficiently pulling cause much save on manpower and operating time.

Pressure: 700 bar
Pump not included

TECHNICAL DATA

Capacity	Model No.	Reach (Max. mm)	Spread (Max. mm)	Stroke (mm)	Pump Tip (mm)			Jaw Tip (mm)			Weight (kg)
				H	E	F	G	A	B	C	
4 Ton	PRE 403	190	315	60	42	22	40	13	10	22	5.6
8 Ton	PRE 803	280	460	85	50	25	70	13	13	27.5	9.0
12 Ton	PRE 1203	300	515	85	60	28	70	15	16.5	29	11.7
20 Ton	PRE 2003	325	520	111	80	40	62	20	27	33	24.0
30 Ton	PRE 3003	415	620	111	98	50	85	20	27	38	34.0

Patented in USA, Germany, Taiwan, P.R.C.....etc.

PUSH PULLER / THREE-IN-ONE

The first Three-in-one push puller in the world !

INNER PULLING

PUSHING

OUTER PULLING

SIMPLE, EASY

The patented unique design provides the end users to get the three-in-one tool for installing, outer pulling and inner pulling with the great convenience and safety.
The push puller is speciaally designed for having combined use on pushing and pulling. This creates one tool to provide the both of most even force for pushing and pulling with great convenience.
The pushing jaw heads on the inner ring of the bearing which prevents the force and/or heat from being transimtted through the outer ring and the rolling parts, minimizing the risk of bearing damaged.

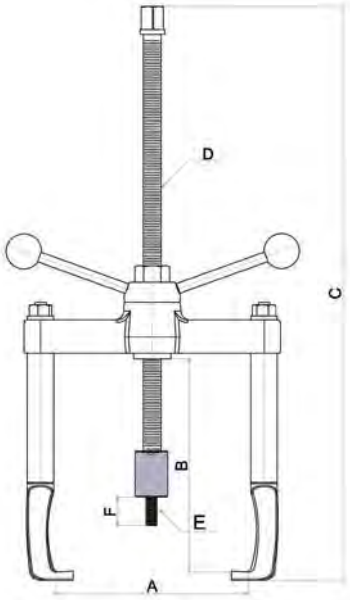

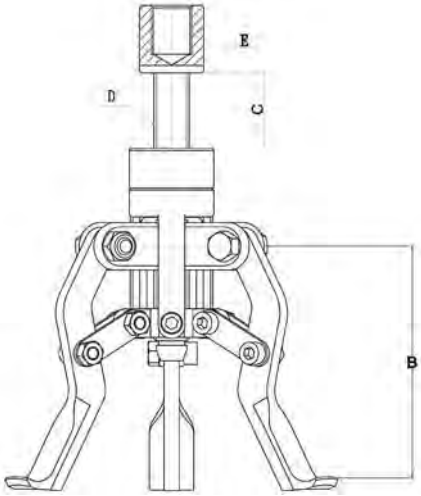

MD6203

PUSH PULLER / THREE-IN-ONE

The first Three-in-one push puller in the world !

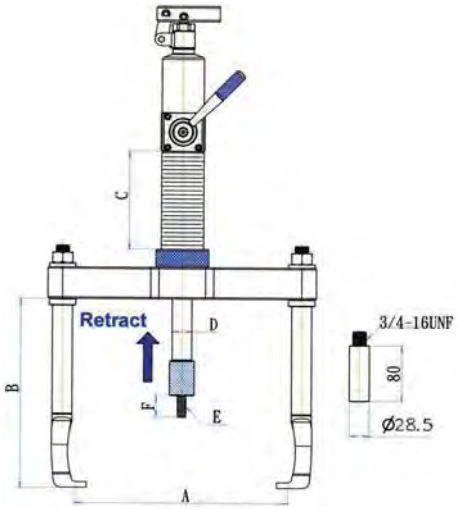

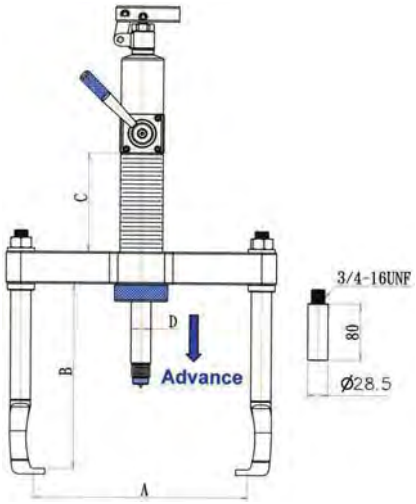

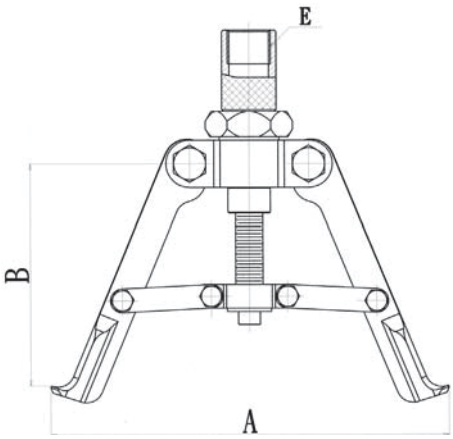

USER-FRIENDLY:

- Unique & Patented double action pump body to provide the pushing and pulling force.
- Unique jaw design for installing and outer pulling without removing and changing.
- Three jaw structure provides the even and constant force always, whenever for installing, outer pulling and inner pulling.
- Depends on the user's demand, the extension bars can achieve with the extra reach requirements.
- Self-centering design on inner puller provides the even force always and eliminate the jaws sliding off during operating.

SAFE:

- The built-in safty valve provides the user's safety and prevent the tool and work object form damage.
- The built-in safety valve prevents the user being harmed and work object being damaged by rated pressure which can not be reset or adjusted.
- The most parts are made by forging with SCM440 alloy steel which is achieving with the most safety and durable product.

COST SAVING:

- Built-in Safety valve ensure the tool to be operated per the rated pressure always and much extend the tool life.
- Three-in One design much save the manpower, the time of resetting up tool and operation.
- This push puller is ideal for installing and dismantling a wide variety of press-fit parts, including bushings, wheels, bearings, gears and pulleys.

SPECIFICATIONS

Model No.	Operation	Output (Tons)	A (mm)	B (mm)	C (mm)	D (mm)	E (mm)	F (mm)	Weight (kgs)
PD12080	Installing	8	44-280	270	140	28	M12-P1.75	30	19.5
	Outer Pulling	12	85-300	260	140	28	---	---	---
	Inner Pulling	8	110-210	130-150	---	---	1"-12UNF	---	---
PDR12080	Installing	8	44-280	270	140	28	M12-P1.75	30	17.5
	Outer Pulling	12	85-300	260	140	28	---	---	---
	Inner Pulling	8	110-210	130-150	--	---	1"-12UNF	---	---
MD6203	Installing	6	70-206	240	720	3/4"-10UNC	M12-P1.75	30	10.5
	Outer Pulling	8	29-186	230	720	3/4"-10UNC	---	---	---
	Inner Pulling	6	52-150	130-150	34	5/8"-11UNC	3/4"-10UNC	---	---

TRI-SECTION PLATES

The first Swing Tri-section Plates in the world !

Swivel ear design to get wide open spread

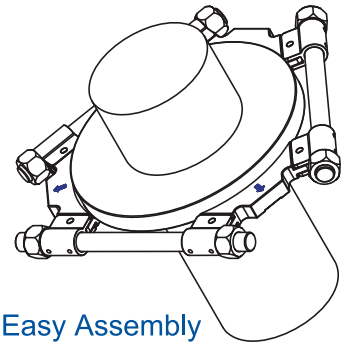

Easy Assembly

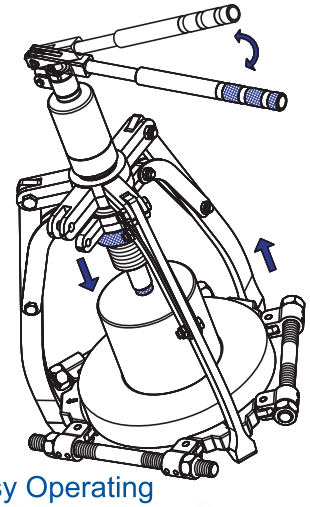

Easy Operating

SIMPLE, EASY

The tri-section plates are specially designed for having combined use with the three-armed pullers.The unique and patented swing design creates the max. spread and provides the most even force on most efficient point. The plates grip behind the inner & outer rings of the bearing together which prevents the pulling force from being transmitted through the rolling parts, minimizing the risk of bearing damaged.

Spreading - Rear Side

Spreading - Front Side

The ET3 series consists of 3 different sizes of tri-section plates which are suitable for shafts with max. diameter ranged from 50 to 495 mm(2 to 19.5 in).

TRI-SECTION PLATES

The first Swing Tri-section Plates in the world !

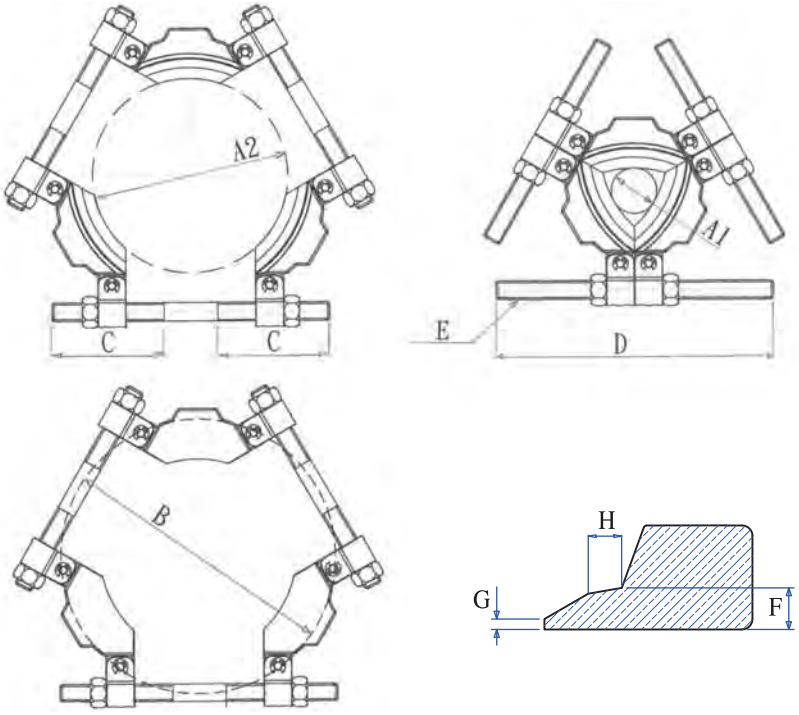

No More Extra Accessories!

USER-FRIENDLY:

- Unique & Patented Swing design creates the maximizing spread.
- The tri-section construction provide the even force distribution, preventing bearing from locking and/or tilting on the shaft during dismounting.
- Suitable for using in combination with all three-armed pullers.
- Availabie in a wide range, covering the most common shaft sizes.

SAFE:

- The unique design of ET3 series provide the application of force on most efficient point, the inner ring & outer ring together, and thereby requiring less force for dismounting than upon pulling on the outer ring.
- The firm grip behind bearing's inner & outer rings ensures that the pulling force are not transmitted through the rolling parts, preventing bearing from damaging.
- The most parts are made by forging with SCM440 alloy steel which is achieving with the most safety and durable product.

COST SAVING:

- The patented and swing design creates the bigger spread than all other splitters and causes much cost saving.
- The unique design create the most efficient, convenient and common shsft sizes covered on the pulling job.
- Eliminating the needs of extra accessory set and saving much cost from now on.

SPECIFICATIONS (mm)

Model No.	Available Shaft Dia.		Spread B(Max.)	C	D	E	F	G	H	Capacity (Ton)	Weight (kg)
	A1	A2									
ET3-160	26	160	216	105	240	5/8"-11UNC	8	2	6.5	6	3.5
ET3-210	50	210	280	117	285	7/8"-14UNF	10	2	9	8	5.5
ET3-340	90	340	460	175	430	1 1/4"-12UNF	14	2	8	20	18
ET3-495	140	495	660	235	610	1 3/4"-12UNF	20	2	12	30	45

50 TON EASY PULLER

Simple & Easy, User-Friendly, Safety and Cost Saving - Our Goals Always!

FEATURES:

1. Foot operating hydraulic lift system for easy and precise position of puller section.
2. Flow metering system providing the constant lowering speed of puller.
3. Double acting hydraulic system for holding, opening & closing jaws ; also provide a safe,secure grip on work object always.
4. Self-centering design keeps puller jaws clamp work object evenly and automatically.
5. Electric Hydraulic Pump advances and retracts the pushing cylinder only to prevent operating errors from happening.
6. The easy jaw operating system prevent puller jaws from sliding and/or springing off the work object being pulled always.
7. Puller can be assembled in 2 or 3-WAY configurations.
8. Puller can be adjusted with 5 degree to up or to down of puller centerline for precisely positioning.
9. Cart's swivel casters provide movement of cart easy.
10. Electric Hydraulic pump is two stage version ; the low pressure stage provides the fast stroking to save time ; the high pressure stage is controlled by remote hand switch.
11. 50 Ton Cylinder is single-acting, spring return type with a maximum working pressure of 10,000 psi.
12. Three extensions are standard attachments for the needs on extra stroke.
13. PRE50T is designed as the competitive version for costwise option.

＊This model is patented in Taiwan & Germany, and patent pending in USA & PRC.

50 TON EASY PULLER

Capacity: 50 Tons
Max. Spread: 860 mm
Max. Reach: 455 mm
Self-Centering
The Competitive model on the market

PRE50T
(Short Jaw Model)

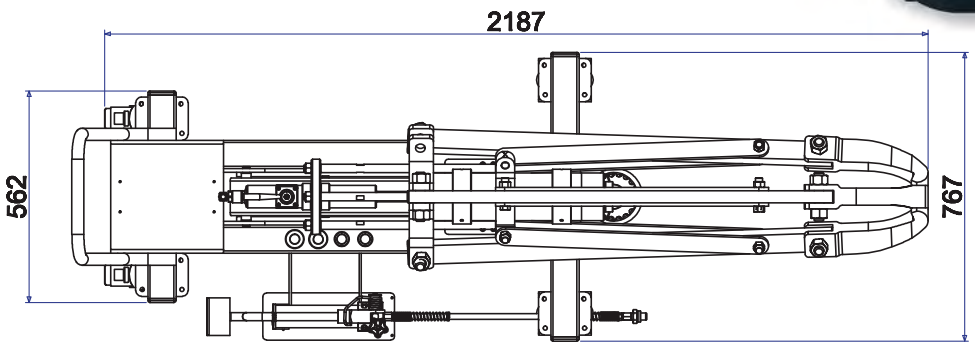

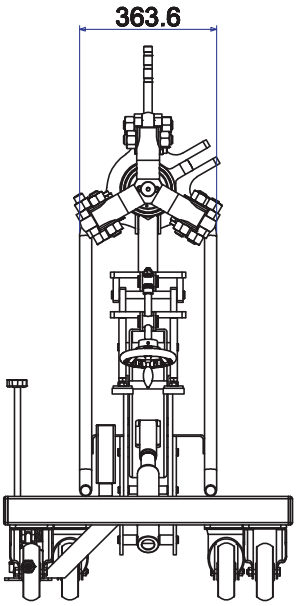

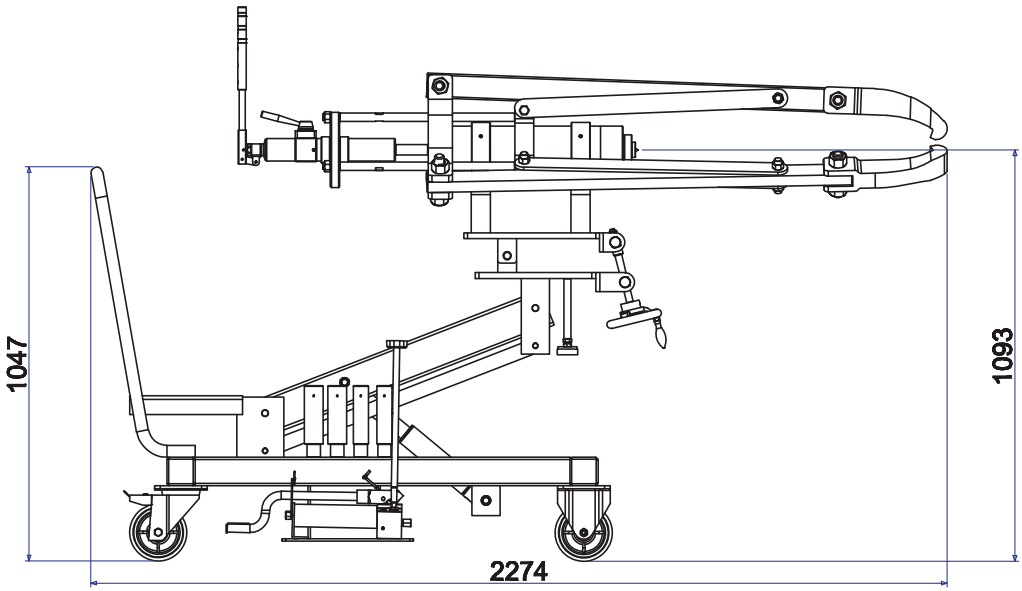

Jaw Tip

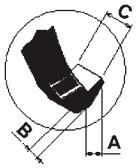

Extension Rods

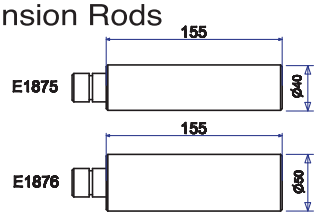

SPECIFICATIONS

Model No.	Reach (Max/mm)	Spread (Max/mm)	Stroke (mm)	Overall Dimensions (mm)	Power Source	Weight (kgs)	Jaw Tip		
							A	B	C
PME50TE*	720	1250	330	767x2274x1047	220V / 50Hz	391	23	35	60
PME50T	720	1250	330	767x2274x1047	- - -	360			
PRE50T**	455	860	160	364x1035	- - -	140			

* This model is equipped with Electric Pump - EP18S.
* * The hand pump is not included in this model.

ELECTRIC PUMP - Specification

Model No.	Acting	Reservoir Capacity(c.c.)	Function	Motor	Oil Del. (c.c. / min. @)			
					0 psi	100 psi	5000 psi	10000 psi
EP18S	Single	8000	Adv./Hold/Retract	1/2HP Single Phase 220V, 50/60 Hz	4200	3100	330	260

TORQUE Elite

150 & 100 TON EASY PULLER

Simple & Easy, User-Friendly, Safety and Cost Saving - Our Goals Always!

FEATURES:

- Air Hydraulic Lifting system for easy and precise position of puller section.
- Flow metering system provides the constant lowering speed of puller.
- Double acting hydraulic system for holding, opening & closing jaws ; also provide a safe, secure grip on work object always.
- Self-centering design keeps puller jaws clamp work object evenly and automatically.
- Electrical Hydraulic Pump advances and retracts the pushing cylinder only to prevent operating errors from happening.
- The easy jaw head adjusting system prevents puller jaws from sliding and/or spring off the work object being pulled always.
- Puller can be assembled in 2 or 3-WAY configurations.
- Puller can be adjusted with 5 degree to up or down of puller centerline for precisely positioning.
- Carts swivel casters provide movement of cart easily.
- Electrical Hydraulic Pump is two stage version ; the low pressure stage provides the fast stroking to save time ; the high pressure stage is controlled by remote hand switch.
- 100 Ton Cylinder is single-acting, spring type with a maximum working pressure of 10,000 psi.
- Three extensions are standard attachments for the needs on extra stroke.
- **Intergated Control System for operating Lift and Push easily and efficiently by Electric Pump only. (Equipment on requesting)**

＊These models are patented in Taiwan & Germany, and patent pending in USA & PRC.

TORQUE Elite 100 TON EASY PULLER

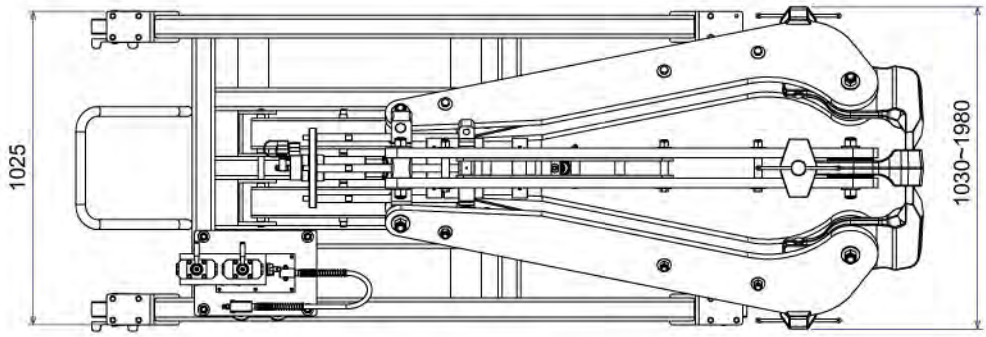

Model No.:PME100T
Cylinder Stroke: 270mm
Capacity: 100 Ton
Min. Spread: 300mm
Max. Spread: 1500mm
Reach at Min. Spread: 1220mm
Reach at Max. Spread: 952mm

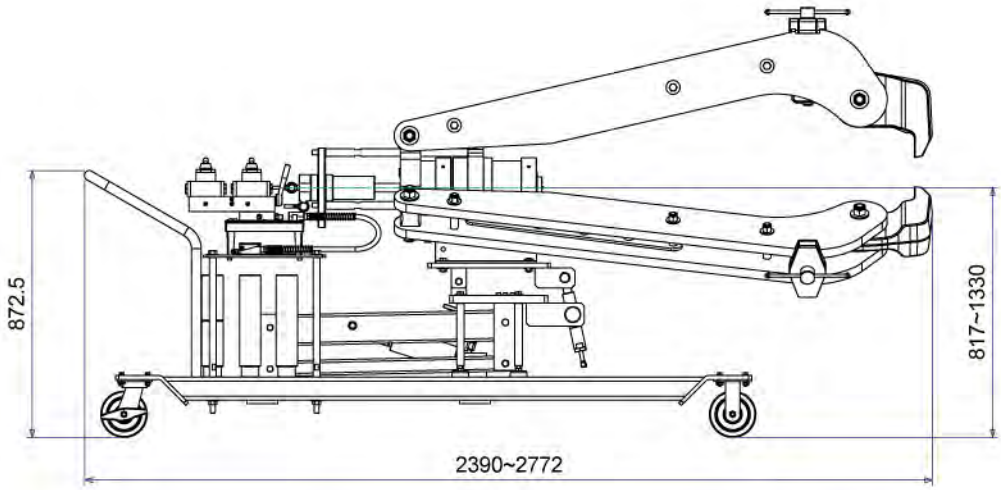

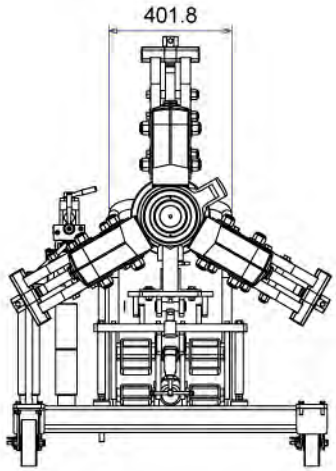

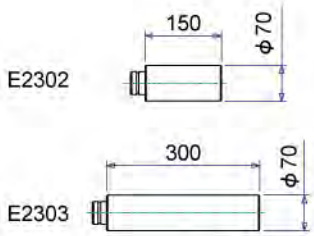

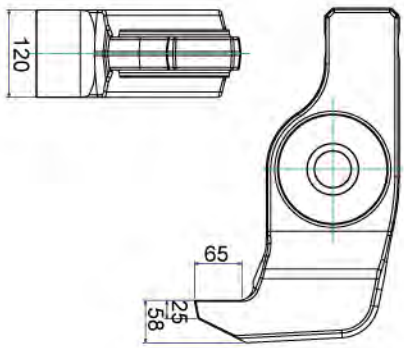

EXTENSIONS & JAW TIP

Part No.	Dia. (mm)	Length (mm)	Qty (pc)	Jaw Tip Dimensions (mm)
E2302	70	150	2	Tip Depth: 65 Tip Clearance: 25 - 58 Tip Width: 120
E2303		300	2	

SPECIFICATIONS

Model No.	Reach (Max/mm)	Spread (Max/mm)	Stroke (mm)	Overall Dimensions (mm)	Power Sources	Weight (kgs)
PME100T	1220	1500	270	1030x2772x1334	---	1083
PME100TE*	1220	1500	270	1030x2772x1334		

* This model is equipped with the Electric Pumps according to Customer's requirement.

* ELECTRIC PUMPS:
We suggest two models of EP211 & EP420 as the options.
Kindly pls contact with our distributors for further information.

TORQUE Elite 150 TON EASY PULLER

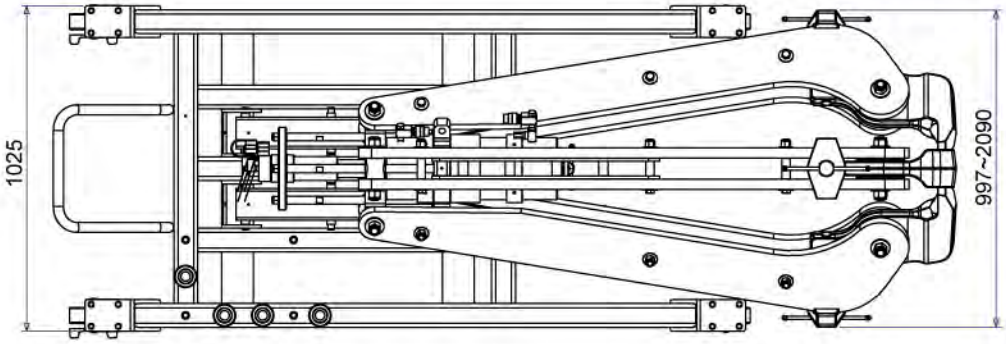

Model No.:PME150T
Cylinder Stroke: 330mm
Capacity: 150 Ton
Min. Spread: 300mm
Max. Spread: 1650mm
Reach at Min. Spread: 1175mm
Reach at Max. Spread: 970mm

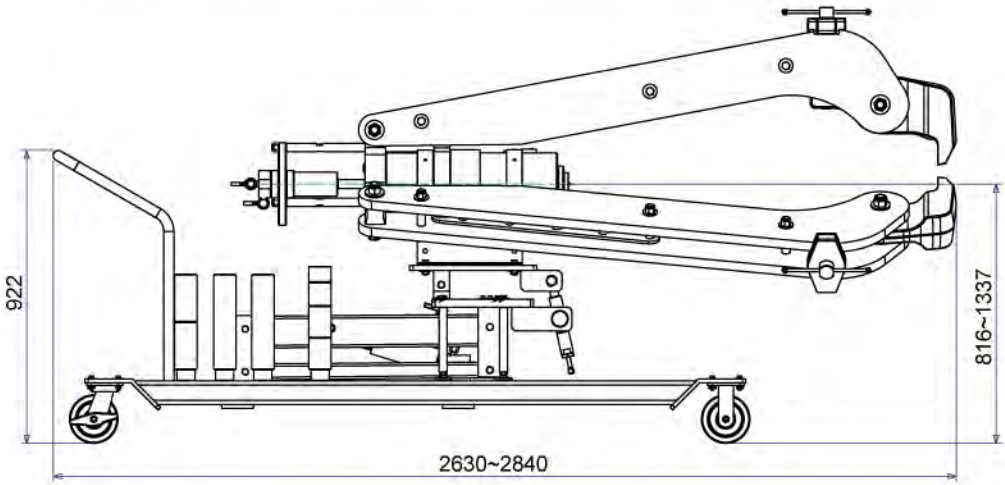

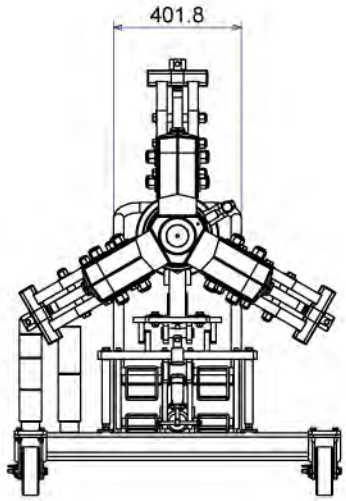

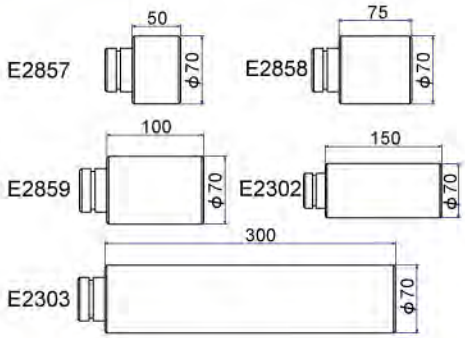

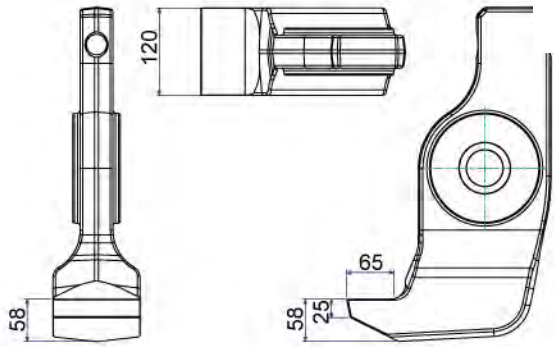

EXTENSIONS & JAW TIP

Part No.	Dia. (mm)	Length (mm)	Qty (pc)	Jaw Tip Dimensions (mm)
E2857	70	50	1	Tip Depth: 65 Tip Clearance: 25 - 58 Tip Width: 120
E2858		75	1	
E2859		100	2	
E2302		150	2	
E2303		300	2	

SPECIFICATIONS

Model No.	Reach (Max/mm)	Spread (Max/mm)	Stroke (mm)	Overall Dimensions (mm)	Power Sources	Weight (kgs)
PME150T	1175	1650	330	1025x2840x1340	- - -	1223
PME150TE*	1175	1650	330	1025x2840x1340		

* This model is equipped with the Electric Pumps according to Customer's requirement.

* ELECTRIC PUMPS:
We suggest two models of EP211 & EP420 as the options.
Kindly pls contact with our distributors for further information.

100 Ton Push Puller (Railroad Version)

Accessory Set for Metric & Inch (Class B ~ F)

Accessory Set for Inch (Class G ~ GG)

FEATURES:

- Dismantle or Install the tapered roller bearings easily and efficiently.
- Specially designed for the major bearing manufacturers.
- The simple, efficient and easy operation provided with the pulling force - 100 Ton.
- Single Unit with portable design for easy, convenient positioning and saving storage space much.
- The basic equipment in most wheel shops.

Universal railroad axle journal roller bearing push puller

Now, we are available to provide the basic tool in the most wheel shops for dismantling and installing the axle journal roller bearings. With this proper equipment and know-how, you can save the maximum of time and effort on maintenance for sure.

From class B through GG, each unit service a full line of bearings with rotating end caps. Simply remove the end caps, slip the pulling shoe between the bearings and the wheel, start the pump, the bearing being removed within seconds under the pulling force of 100 Ton easily.

The pulling shoe and installing tube ensure the most convenient and fast installation. 100-ton hydraulic cylinder is working under 10,000 psi always.

TORQUE Elite 100 Ton Push Puller (Railroad Version)

MODEL:MDTU100TE

MODEL: BRBP100T

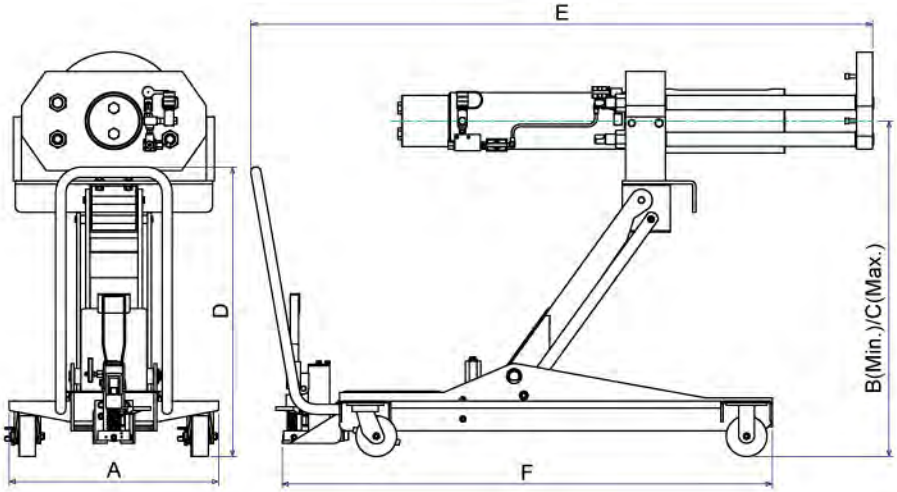

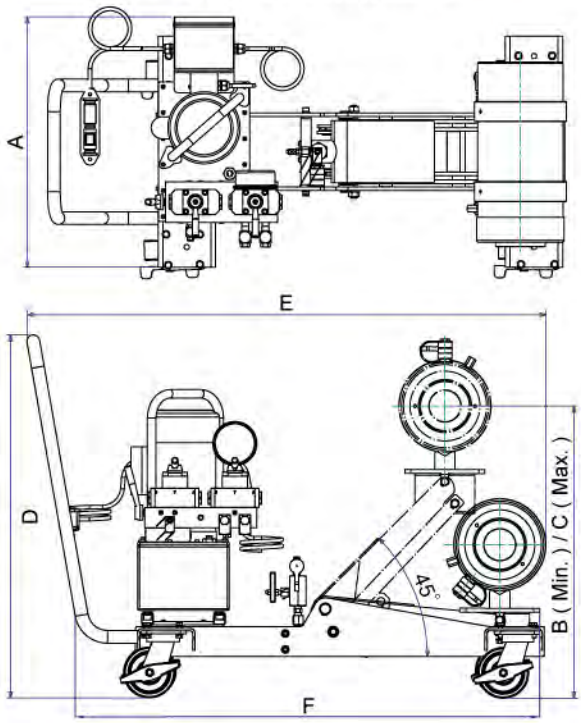

Accessory Set order information - IMPORTANT...

This accessory chart applies only to AAR confirgrations for freight care applications.

Class & Size of bearing assembly - TBU & SP " Metric Accessories "

Accessory Description	120	130	140	150
Pulling Shoe Insert Adapter	No. F0436	No. F0437	No. F0438	No. F0439
Guide Tube & Cap Screw Assembly	No. E2601	No. E2602	No. E2603	No. E2604
Cap Screw**	No. H0421	No. H0421	No. H0421	No. H0422
Guide Tube Adapter	No. B1248	No. B1248	No. B1248	No. B1248
Installing Tube Adapter Ring	No. D1031	No. D1032	No. D1033	No. D1034

Class & size (inch) of bearing assembly to be serviced

Accessory Description	Class B 4¼" x 8"	Class C 5" x 9"	Class D 5½" x 10"	Class E 6" x 11"	Class EE 5½" Axle.	Class EE 6" Axle.	Class F 6½" x 12"	Class G 7" x 12"	Class G 6½" Axle.	Class GG 6½" Axle.
Pulling Shoe	No. F0442 is included as part of basic machine - Do Not Order							F0443	F0443	F0443
Pulling Shoe Insert Adapter	F0440	F0437	F0438	F0439	F0439	F0441	F0441	---	---	---
Guide Tube & Cap Screw Assembly	F0435-1	F0435-2	E2605	E2606	E2607	E2608	E2609	E2611	E2610	E2612
Cap Screw**	H0423	H0424	H0425	H0426	H0427	H0425	H0428	H0430	H0429	H0429
Guide Tube Adapter	B1247	B1246	B1246	B1248	B1248	B1248	B1248	B1248	B1248	B1248
Installing Tube	No. D1044 is included as part of basic machine - Do Not Order							D1045	D1045	D1045
Installing Tube Adapter Ring	B1243	D1037	D1038	D1039	D1039	D1040	D1040	D1042	D1041	D1041

Note: Adapter listed above are for servicing the following roller bearing assemblies: Brenco " Crown-Taper ", New Departure-Hyatt " HyRoll Taper ", SKF " Expediter " and Timken " AP ".

* Screws are supplied with the guide tube and should be ordered as replacements only.

SPECIFICATION

Model No.	Stroke (mm)	Capacity (Ton) Pull	Capacity (Ton) Inst.	A (mm)	B (mm)	C (mm)	D (mm)	E (mm)	F (mm)	Weight (kg)
BRBP100T	392	100	68	652	370	1047	900	1940-2209	1530	418
BRBP100TE*	392	100	68	652	370	1047	900	1940-2209	1530	455
MDTU100TE*	254	100	68	627	384	731	909	1299	1175	429

* This model is equipped with the Electric Pump - EP211D.

ELECTRIC PUMP - Specifications

Model No.	Acting	Reservoir Capacity (c.c.)	Function	Motor	Oil Del. (c.c./min. @) 0(psi)	100(psi)	5000(psi)	10000(psi)
EP211D	Double	11000	Adv./Hold /Retract	1/2HP Single Phase 220V, 50/60 Hz	8200	7400	840	650

NUT SPLITTERS

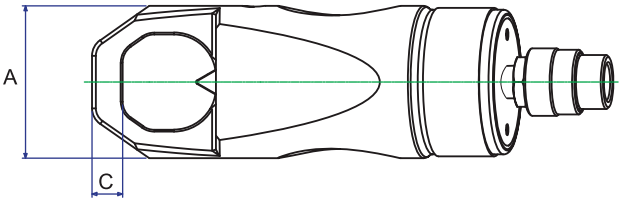

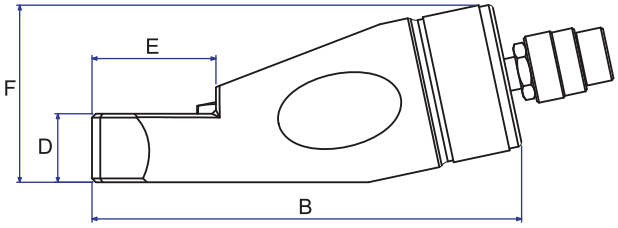

FEATURES:

- Compact design used in confined space with enough force to split the rusted nuts.
- All models feature a rugged one-piece cutting frame coupled to a heavy-duty hydraulic cylinder.
- Specially designed " tool steel " cutter blade cuts the nut to the precise point where it cracks.
- Unique angled head design to keep full contact with the nut being penetrated.
- Unique angled cutter blade with radius to have the greater resistance to cutting and bracking nuts.
- 5 popular models applicable to cover the most range of nuts

Hand Pumps, Page 3

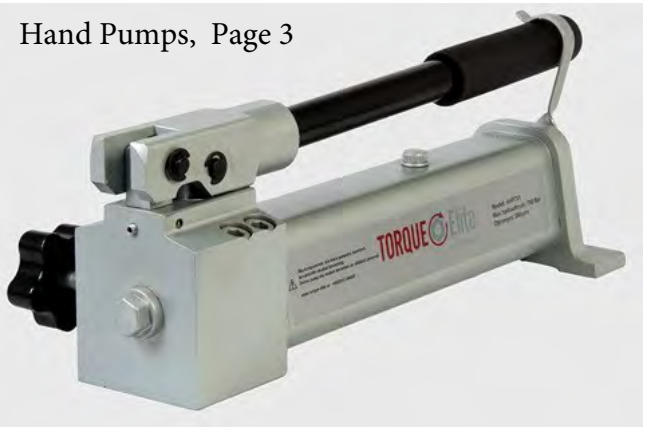

SPECIFICATIONS

Model No.	Hexagon Nut Range (mm)	Bolt Range (mm)	Capacity (ton)	Oil Capacity (c.c.)	Dimensions						Weight (kg)
					A (mm)	B (mm)	C (mm)	D (mm)	E (mm)	F (mm)	
HNS1924	19-24	M12-M16	10	20	60	167.2	10	25	40	68	2.1
HNS2432	24-32	M16-M22	15	60	70	178	13	30	52	76	3.1
HNS3241	32-41	M22-M27	20	80	80	226	15	36	65	93	4.2
HNS4150	41-50	M27-M33	35	155	95	244	21	45	76	106	8.0
HNS5060	50-60	M33-M39	50	240	106	269	24	55	92	125	11.5

Notes: The Hardness of Nut Material must not excess HRc-44.
Should not be used on stainless steel nuts and/or square shape nuts.

Flange Spreader MFS7T

FEATURES:

For use on smaller, lower pressure flange joints with a minimum access gap of 2.0 mm.
The tool will prodice 6.8 Ton of Spreading Force.

SPECIAL FEATURES

- Innovative double configuration design giving greater range of application
- Unique double-angled wedge produces greater spreading force without reducing spreading distance
- Robust lightweight tool
- Environmentally friendly
- Requires only 2.0mm (0.08") access gap

OPERATING BENEFITS

- Locks On To Fiange Joint
- Safe Operation
- Quick And Easy Operation
- Saves Time
- Saves Cost
- Portable

TOOL CAPABILITIES

SPREADING FORCE
- Single tool: 68kN (6.8T)
- Used in pairs (as recommended): 136kN (13.6T)

SPREADING DISTANCE
- 2.0mm – 27.0mm (0.08" – 1.06")

TOOL WEIGHT
- 5.0kg (11.0lb)

INVERTED CONFIGURATION

EXTENDED CONFIGURATION

TORQUE Elite

LOW-HEIGHT JACKS

CJ Jack
10 or 20 tons capacity

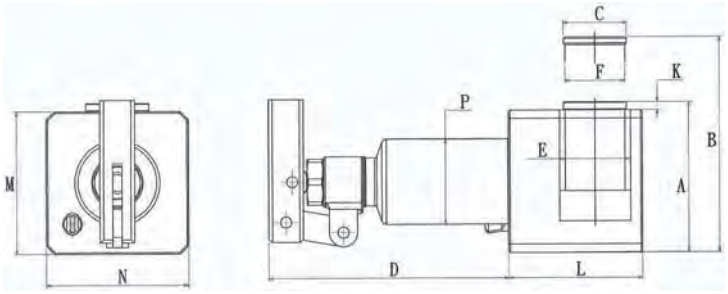

FEATURES:

CJ Series

- Spring return
- Available in 10 & 20 Tons.
- Stroke: 41 mm.
- Max. working pressure: 10,000 psi / 700 bar.
- Piston: Hard chromed.
- Ram inside rollpolished
- Perfect for the jobs within much limited space, like machines' positioning, tools' mounting and load tests.

LOW-HEIGHT JACKS

Model No.	Cap. (Ton)	Stroke (mm)	Oil Cap. (cm^3)	A	B	C Ømm	D mm	E Ømm	F Ømm	H mm	K mm	L mm	M mm	N mm	P Ømm	Weight (kgs)
				Height(mm)												
				Retracted	Extended											
CJ100	10	41	155	95	136	40	152.5	45	37.95	407.5	4.9	85	90	90	53.8	5.5
CJ200	20	41	250	95	136	40	152.5	65	50.8	407.5	4.9	110	90	110	69.8	8

Pullers

Hand Pumps

Cylinders

Power Pumps

HYDRAULICAL SPREADERS

Loads are lifted perpendicularly!

SR15 SR07 TL07

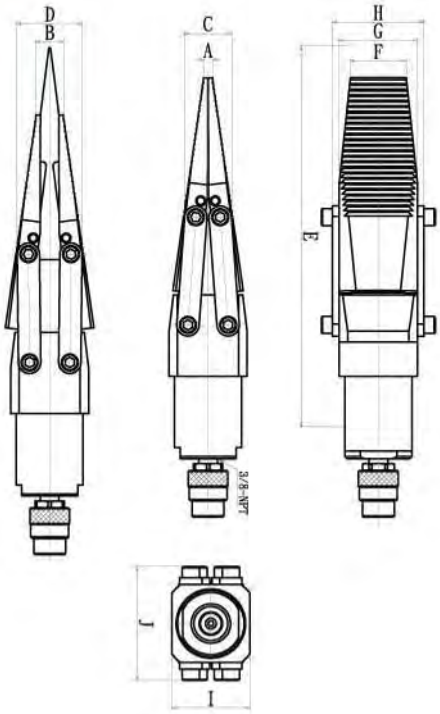

FEATURES:

- Ideal for numerous industrial maintenance repair jobs.
- Accurate height adjustments (for instance shaft alignment) can easily be executed by one person.
- Easy, light and very practical to use.
- Particularly suitable when available space is very limited.
- Suitable for spaces of 5 to 40 mm.
- Due to the reduced thickness of the jaws, made of high quality hardened steel, these multi-functional wedges can be used for jobs where working space is extremely limited.

Hand pumps: page 3

TECHNICAL DATA

Model No.	Capacity Tons	Spread (mm)		Stroke (mm)	C (mm)	D (mm)	E (mm)	F (mm)	G (mm)	H (mm)	I (mm)	J (mm)	Weight (kgs)
		Min - A	Max - B										
SR07	15	6	16	25	36	46	232	31	45	55	Ø63	63	3.3
TL07	15	6	16	25	36	46	232	31	45	55	Ø63	63	3.3
SR15	25	8	25	65	43	59	342	50	70	82	70	102	7.8

TORQUE Elite HYDRAULIC LIFTING WEDGE

PRECISION LIFTING SOLUTIONS

HLW18T

HLW18TC
With integrated pump

FEATURES:

Designed to lift or lower objects in a straight, vertical motion, the HLW range will give a safe, smooth, secure hold when lifting or lowering heavy equipment.
This tool will lift an object in a stable movement from an acess gap of only 9.5 mm.

APPLICATIONS

The HLW range can be used for:

- Lifting heavy machinery
- Machine installation
- Plant maintenance
- Machinery alignment
- Can Be Used in conjunction with skates

OPERATING BENEFITS

- Stable lift motion
- Robust and precise tool
- Secure hold on each step
- Safe operation
- Saves time
- Saves cost

SPECIAL FEATURES

- Smooth, straight, vertical lift
- Operates with an access gap of only 9.5mm (0.37")
- Each step offers 19.0mm (0.75") of vertical lift
- Maximum lift using stepped block 67.5mm (2.66")
- Single acting ram
- Lifting force of 180kN (18T)
- Automatic manual retraction
- Interlocking first step
- Environmentally friendly

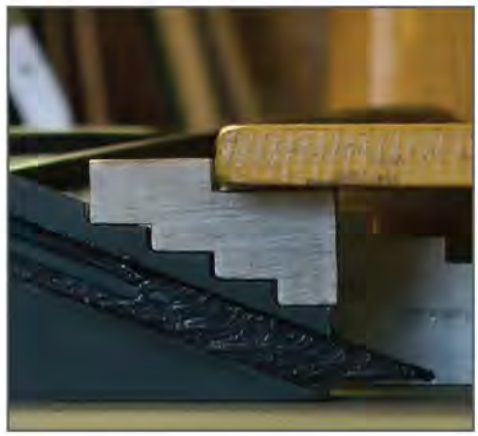

The safe, simple and cost-effective tools to lifting heavy equipment with minimum floor clearance.
Using two HLW18T will allow a lift of 36 Ton.
The HLW18TC is actuated by an intergal hydraulic system, no more hose, couplers & hand pump needed.

TOOL CAPABILITIES

LIFTING FORCE

- With 700bar (10,000psi) hydraulic pressure applied: 180kN (18T)

LIFTING DISTANCE

- 9.5mm – 29.5mm (0.37" - 1.16") using only 1st step
- 9.5mm – 51.5mm (0.37" - 2.03") using 4 steps(without stepped blocks)
- 39.5mm – 67.5mm (1.55" - 2.66") using stepped block

TOOL WEIGHT

- 8.5 KG / 12.0 KG

System Components

We can offer a wide range of accessories such as gauges, hoses, couplers, manifolds, fittings and valves. Torque Elite has accessories to complement your hydraulic system and ensure the operating oofficiency, long life and safety.

HOSES

Heavy duty max working pressure 700 bar. Burst pressure 2800 bar(4:1).

Description	Model No.	Dimensions (mm)
		Standard Flow (I/D: 1/4") End one: 3/8" NPT End two: 3/8" NPT
	TE-7100 TE-7200 TE-7300 TE-7500	Length 1m Length 2m Length 3m Lenght 5m

COUPLERS

Description	Model No.	Dimensions (mm)	Model No.
	CP210	NEEDLE RAM HALF: 1/4 NPT HOSE HALF: 1/4 NPT	
		NEEDLE RAM HALF: 3/8 NPT HOSE HALF: 3/8 NPT	Ram half: 10 115 6454 Hose half: 10 115 1404
		NEEDLE RAM HALF: 3/8 NPT HOSE HALF: 3/8 NPT	Ram half: TE-400 Hose half: TE-604

MANIFOLDS & FITTINGS

Description	Model No.	Dimensions (mm)
7 Female ports - 178 mm Long	JP64	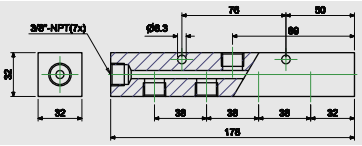
7 Female ports - 369 mm long Available directly mounting of control valves	JP65	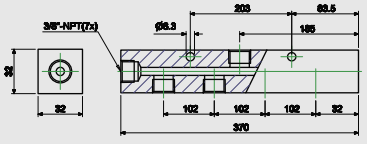
6-Port Hexagon Type	JP66	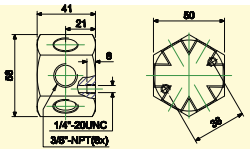
Premounted Manifolds	VB201	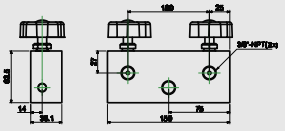
Split-flow valve to Control 2/3 single-acting cylinders simultaneous	VB301	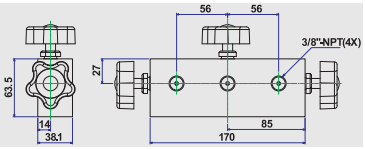
Available as split-flow valve to control two / four single-acting cylinders simultaneously.	VB401	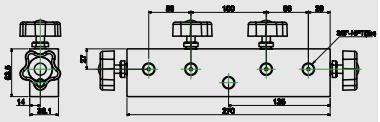

GAUGE ADAPTORS

Description	Model No.	Dimensions (mm)
65 mm Long, 3/8NPT - Both	E0567	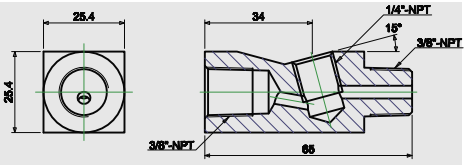
65 mm Long, 3/8NPT -Female ; 1/4NPT - Male	E1336	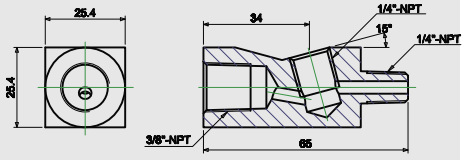
65 mm Long, 1/4 NPT - Both	E1343	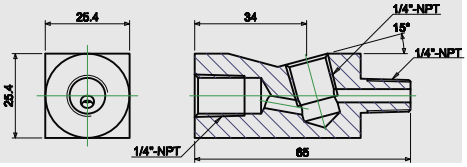
115 mm Long, 3/8NPT - Both	E1745	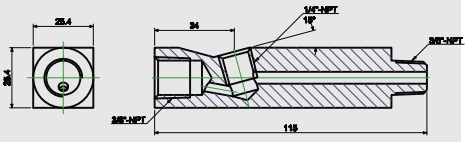

FITTINGS

Description	Model No.	Dimensions (mm)
Elbow	ADL102	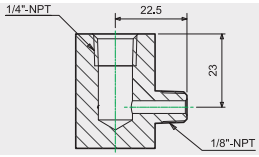
	ADL202	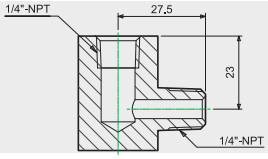
	ADL303	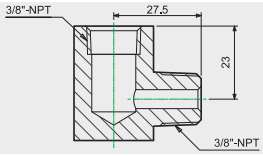
	ADC303	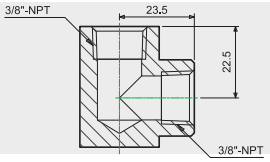
	ADE303	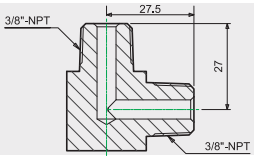
Tee	ADT202	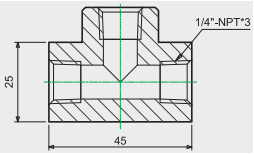
	ADT303	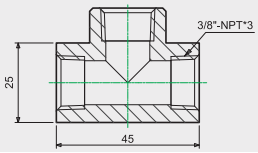
	ADG303	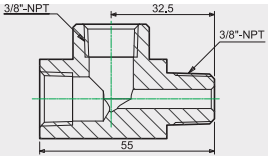
	ADG323	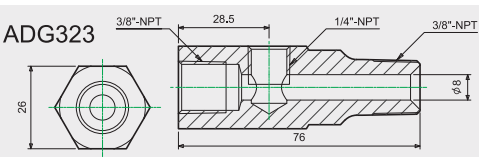
Adaptor	ADF102	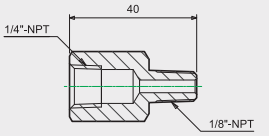
	ADF203	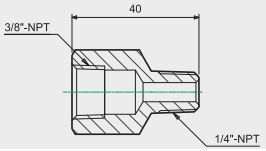

Description	Model No.	Dimensions (mm)
Adaptor	ADF302	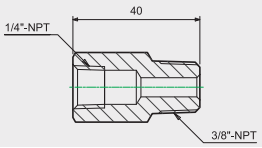
	ADF303	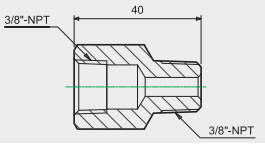
Connector	ADI202	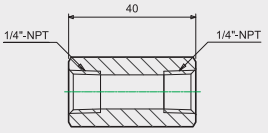
	ADI203	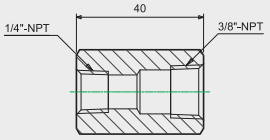
	ADI303	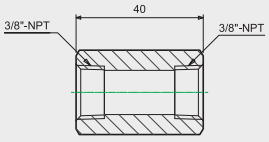
Reducing Connector	ADO203	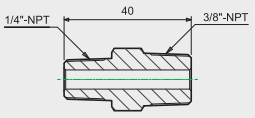
Hexagon Nipple	ADO202	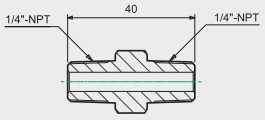
	ADO205	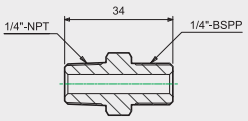
	ADO303	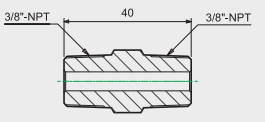
Swivel	BG9705	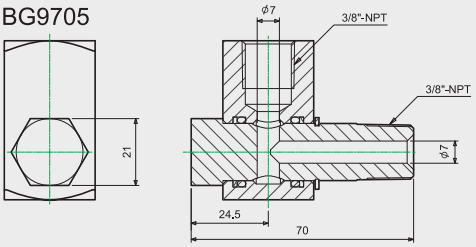

Flow Control Valves

Description	Model No.	Dimensions (mm)
Needle Valve To control cylinder speed, also can be used as shut-off valve for temporary holding. but for precise flow control; not recommended as shut-off valve	VC331	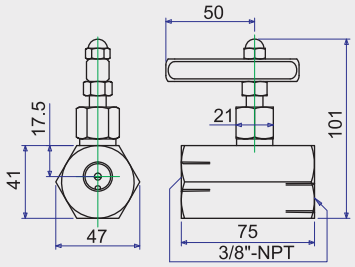
Needle Valve To be used as shut-off valve for temporary holding. Same as VB66, but without auto overload relief design.	VB101	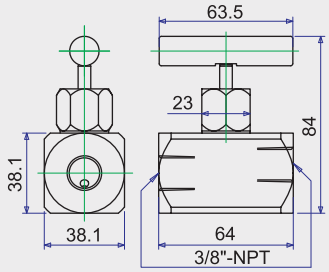
	VB102	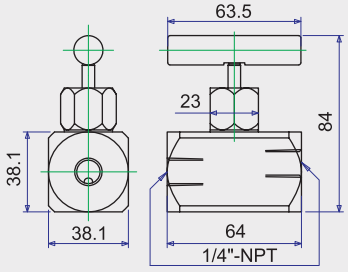
Manually Operated Check Valve Used with single and double acting cylinders for load holding. Upon cylinder retracting, valve is manually opened to allow oil to flow back to tank. and with auto overload relief design.	VB66	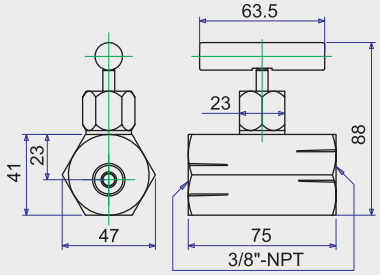

NOTE!
Torque Elite can also offer equipment for extra high pressure. Please contact us for more information.

Extra High Pressure Accessory

GAUGES

Description	Model No.	Dimensions (mm)
	M0031	Liquid filled dampens needle vibration. Calibrated to read in bar, psi. Dial - 2-1/2" ; Thread Size: 1/4NPT Meet DIN Standard Accuracy, % of full scale: ±1.6% Special Dial on Customer's requesting is available and welcome.
	M0136	All Features same as M0031 Except with Dial - 100 mm.

TE 910 H and TE 910 P

01

02

The power kits are delivered in a steel case with carrying handle

TE 910 H: Item 1 and 3-16 **TE 910 P:** Item 2 and 3-16

Item	Part no	Description
01	AHP 702 CPL	2 stage handpump cpl with gauge, 2 m hose and couplings
02	AP 921 CPL	Pneumatic pump cpl with gauge, 2m hose and couplings
03	RA 106 B	10 ton cylinder, 152 mm stroke
04	SR 05 A	500 kg spreader
05	B0519	Extension tube, 482 mm
06	B0520	Extension tube, 355 mm
07	B0521	Extension tube, 254 mm
08	B0522	Extension tube, 127 mm
09	B0406	Male connector
10	F0174	Flat base
11	F0175	90° "V-base"
12	F0176	Wedge heade
13	F0177	Plunger toe
14	F0178	Cylinder toe
15	B0083	Rubber flex head
16	F0173	Serrated saddle

SUPPLIERS:

Atlas Copco Auktoriserad partner Industriteknik

momento

RAPID-TORC Part of the Atlas Copco Group

norbar Norbar Torque Tools

Tentec Part of the Atlas Copco Group

RUD

TORQUE ELITE

ADDRESS:
P.O. Box 14
642 21 Flen
Sweden

VISITING ADDRESS:
Kungsvägen 68
642 21 Flen
Sweden

Phone: +46 157 660 60
info@torque-elite.se
www.torque-elite.se

TORQUE Elite